Suggestions Section

By "Spanner"

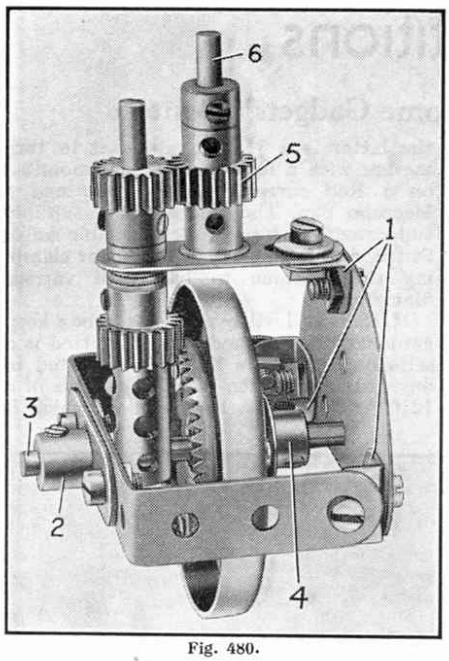

Fig. 480.

(480) Pivoted Front Wheel Drive

(K. H. Pritchard, Brook's Green)

The mechanism seen in Fig. 480 is designed as a pivoted front wheel drive for use in three-wheeled vehicles, such as mobile cranes and mechanical horses. It is suggested by K. H. Pritchard, Brook's Green.

The device is constructed by bolting three Angle Brackets 1 to a 2½″ Semi-Circular Plate. To two of these Angle Brackets are bolted 2½″ × 1½″ Double Angle Strips, and the other ends of these are joined by a Double Arm Crank 2. A 2½″ Rod 3, passed through the Double Arm Crank and the Semi-Circular Plate, carries a Wheel Flange to which a 1½″ Contrate Wheel is bolted by four ⅜″ Bolts. Four Washers on each Bolt space the Contrate Wheel from the Wheel Flange, both of which are free on the Rod. The Rod 3 also carries a Coupling and is held rigidly in place by tightening the Grub Screw in the Double Arm Crank. A ½″ fast Pulley 4 which is held to the Rod 3 by its Grub Screw spaces the Contrate Wheel and Wheel Flange from the 2½″ Semi-Circular Plate.

The Coupling provides a bearing for one end of a 2″ Rod, the other end of which is journalled in one hole of a Double Arm Crank attached to the Semi-Circular Plate by the third Angle Bracket. The 2″ Rod carries a ½″ Pinion that meshes with the 1½″ Contrate Wheel, the Pinion being spaced from the Crank by three Washers. A second ½″ Pinion is carried on this Rod above the Double Arm Crank, and is also spaced from it by Washers. This Pinion meshes with a third ½″ Pinion 5 which is carried on a 1½″ Rod 6. The Pinion is loose on the Rod, which is fixed in the boss of the Double Arm Crank by its Grub Screw.

(481) Right Angle Drive Reversing Gear

(T. A. Wade, Johannesburg)

The frame of this Reversing Gear consists of two 5½″ and two 3″ Angle Girders bolted together to form a rectangle. Two further 3″ Angle Girders are bolted across the frame 2″ from each end. Bearings for the shafts 1 and 2 consist of a Trunnion bolted to the right hand 3″ Girder, a Flat Trunnion held to the left-hand girder by ½″ Bolts, with a Collar on each Bolt to act as a spacer, and a 1½″ Angle Girder held to one of the 3″ Girders by a 1½″ Angle Girder. A 1″ Corner Bracket is bolted to the Flat Girder. A Double Bent Strip is bolted to the back of the other 3″ Angle Girder to provide a bearing for a 1½″ Rod that carries a Collar at one end and a 1½″ Contrate Wheel 4 at the other. This Rod represents the driven shaft.

The Contrate Wheel is spaced from the Girder by Washers. The Rod also carries a Bush Wheel, a Socket Coupling, two ½″ Pinions and a Collar, and is slideable in its bearings. One of the Pinions is gripped in the boss of the Socket Coupling as shown in the illustration. The Rod 2 is 1½″ long and carries a Collar and a Bush Wheel. The Bush Wheel is fitted with two 1½″ Rods 5 and 6 which fit into holes in the other Bush Wheel so that the shafts 1 and 2 turn together.

The direction of rotation of the driven shaft is determined by bringing one of the two Pinions into engagement with the Contrate. This is done by sliding the shaft 1 to right or left, as desired, by means of a slideable 3½″ Rod 5. This Rod carries a Coupling, in one end of which is a 1″ Rod that engages the groove of the Socket Coupling.

(482) Three Speed and Reverse Gear-Box

(G. T. Parkyn, Barnet)

G. T. Parkyn, Barnet, has provided me with details of a compact three-speed and reverse gear-box that he designed with the object of reproducing as closely as possible the constructional method of operation of the gear-boxes usually fitted to small cars. An illustration of the gear-box is shown in Fig. 482 on the opposite page.

The frame in which the gears are housed consists of two 3½″ and two 1½″ Angle Girders bolted together to form a rectangle with their slotted holes horizontal. The space in the middle is filled in with a 3½″ Strip. The sides are 3″ × 1½″ Flat Plates bolted to the 3½″ Angle Girders. To each Flat Plate is bolted a 1½″ Corner Bracket that supports a 1½″ Angle Girder that is held to the Corner Brackets by Angle Brackets. The ends of the frame are 1½″ Flat Girders, which form bearings for the various shafts. Two 1″ × 1″ Angle Brackets are bolted to the 3½″ Strip, so that the projecting lugs are 1½″ apart, and so that each lug is 1″ from the end of the 3½″ Strip.

The driving Rod 1 is a 3½″ Rod and it carries a Collar, two Washers, a 1″ Triangular Plate, a ¾″ Pinion 2 as shown. It is passed through one of the 1″ × 1″ Angle Brackets and carries on the other side of the Bracket a ½″ Pinion 3, two Washers, and another 1″ Triangular Plate. The Rod projects nearly ⅜″ beyond the 1″ Triangular Plate. The driven Rod 14 is 2½″ long and carries a Collar and a ¾″ Pinion 5. It passes through the other 1″ × 1″ Angle Bracket and there is a ½″ Pinion 4 on the portion on the other side of the Bracket. The Rod projects about ¼″ into the bore of the Pinion 4. The projecting end of the driving rod fits into the other half of the bore of the Pinion. The right-hand layshaft 11 is 5″ long and passes through the other hole in the 1″ Triangular Plate and carries a ½″ Pinion 13. Then it passes through a hole in the other Triangular Plate and carries on the other side of it a Pinion 10 taken from a No. 2 Clockwork Motor, and a ½″ fast Pulley.

The left-hand layshaft 12 is a 5″ Rod and carries a No. 2 Clockwork Motor Pinion 7, a ½″ Pinion 6 and a ½″ fast Pulley.

The reversing layshaft is a 2″ Rod and carries two ½″ Pinions 8 and 9 and a Collar and is journalled in the remaining holes of the 1″ Triangular Plates.

The gear changing lever is a 3½″ Rod that carries at one end an End Bearing, the arms of which fit into the grooves of the ½″ Pulley.

The gear-change lever is universally mounted in a Swivel Bearing which is held by a Pivot Bolt that passes through a Collar fixed to the rear end of the gear-box frame.

The layshafts are retained in the neutral position by Pendulum Connections, which are bent to engage the grooves of the ½″ Pulleys.

The various gear trains are as follows. The lowest gear is brought into operation by moving the control lever so that Pinion 3

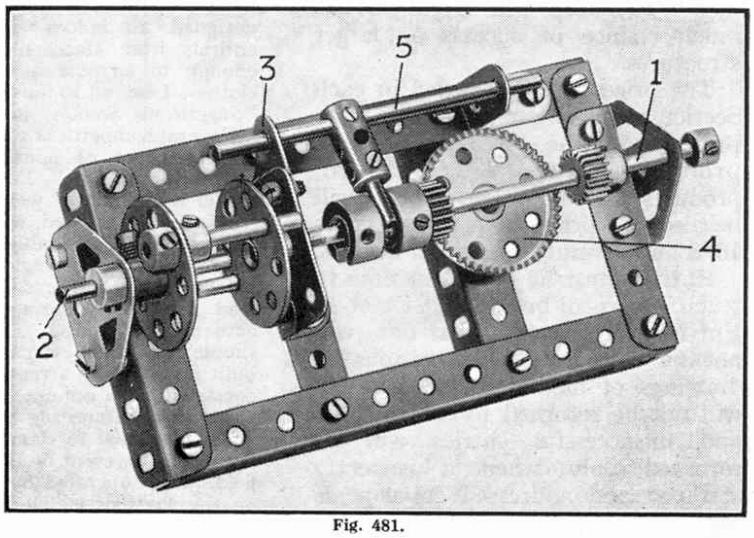

Fig. 481.

engages the Pinion 13 on the Shaft 11 and Pinion 10 engages Pinion 5. For second gear the lever is moved to the left and backward. This movement brings into mesh the Pinions 6, 4 and 3, giving a gear ratio of 1 : 1. The highest gear is brought into operation by moving the lever to the left and forward. This brings into mesh Pinions 2 and 7 and Pinions 6 and 4, giving a gear ratio of 3 : 1. Reverse drive is provided by Pinions 3, 9, 8, 13, 10 and 5.

(483) Steering Gear for Creeper Tracks

("Spanner")

Tanks, tractors, and other forms of transport in which creeper track is employed are often steered by employing separate power units to drive the tracks and varying the speeds of these units. This is not always practicable, however, and this mechanism is a Meccano model of another device.

The power is transmitted from the Motor by a single length of Sprocket Chain that drives a 1″ Sprocket Wheel 42 (Fig. 483) secured on a lay shaft, as shown in the illustration. This shaft is journalled in a suitable framework and is moved from side to side by means of a Crank 46. A Bolt in the end of this Crank is accommodated between two Collars 44 on the lay shaft, and the boss of the Crank is secured on a long Rod running the entire length of the tank or vehicle in which this mechanism is fitted. This Rod is fitted with a handle at the point from which the model is controlled.

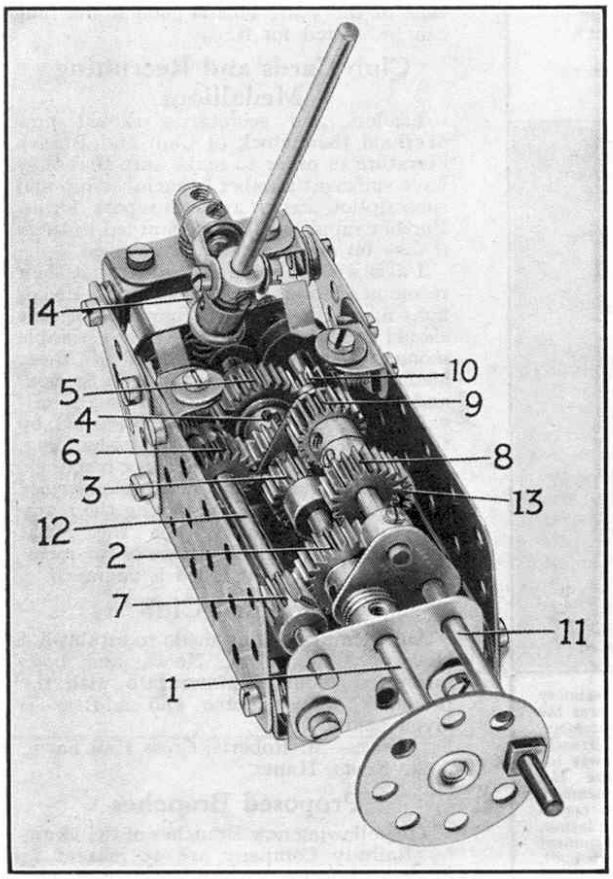

Fig. 482.

A ½″ Pinion 45 is secured on each end of the lay shaft and these Pinions may be engaged or disengaged at will with two 1½″ Gears that drive through 2″ Sprocket 49.

If both sets of gears are in mesh, the vehicle proceeds on a straight course, because the creeper tracks are in line with the frame of the vehicle. The tracks can be rotated independently at will by sliding ½″ Pinions in and out of mesh with their respective Gears.

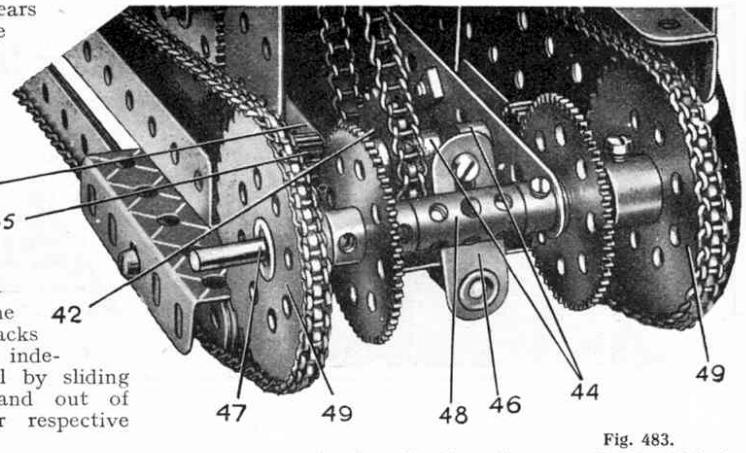

Fig. 483.

(484) Epicyclic Gear Clutch

(C. Potter, Streatham, S.W.16)

An efficient clutch movement that permits the driving power to be applied gradually makes an interesting and necessary addition to a large number of Meccano models such as roundabouts, traction engines and other structures in which heavy loads have to be taken up. The majority of the mechanisms of this type depend for their action upon the friction created between two revolving surfaces, one of which may be pressed against the other with varying force. On the other hand there is another form of clutch that employs spur gearing with which to obtain the required results. This is known as an epicyclic or gear clutch, and an efficient version of it can be constructed from Meccano parts, as shown in Fig. 484.

Two Rods are mounted in line with one another in any suitable bearings. One of the Rods serves as the driving shaft and the other as the driven shaft. The former is gripped by the set screw of a 1½″ Contrate Wheel, the teeth of which engage with ½″ Pinions 4 mounted on 1″ Axle Rods secured in the ends of a Coupling 5. The Pinions are free on their axles, but they are held in place by the Collars 6.

The Rod forming the driven shaft passes through the bosses of a 1½″ Pulley Wheel and a second 1½″ Contrate Wheel 8, and its inner end is secured in the centre transverse hole of the Coupling 5. The Pulley and the Contrate Wheel 8 are both free to turn independently of the driven Rod. They are secured by means of two ½″ Bolts, each of which is equipped with three Nuts, one immediately behind the Pulley and one on each side of the Contrate Wheel 8.

The unit formed by the Pulley and Contrate Wheel 8 is so placed upon the Rod that the teeth of the Contrate Wheel are in constant engagement with the ½″ Pinions 4.

The movement of the Pulley Wheel is controlled by a friction brake consisting of a length of cord, one end of which is tied to an Angle Bracket bolted to the base of the model and the other to a Threaded Boss 10 mounted on a Threaded Rod journalled in a convenient position near the Wheels. This Rod carries a hand wheel 11.

When the brake is in the "off" position, the Pulley unit is free to revolve. Hence if power is applied to the right-hand Contrate Wheel the Pinions 4 commence to turn upon their axles, driving the Contrate Wheel 8 in an opposite direction and no movement is imparted to the Rod passing through its boss. If the hand wheel 11 is rotated in a clockwise direction, the Contrate Wheel 8 becomes increasingly difficult to turn, and the Pinions 4 commence to climb round its teeth, thereby rotating the Coupling 5 and its Rod.

It will be seen from the above that by means of this clutch the power can be applied to the load very smoothly and without shock, for the left-hand Rod commences to rotate immediately the resistance on the Pulley becomes greater than the load. The speed of the latter Rod increases in proportion to the increase in the resistance on the Pulley and maximum speed is reached when the movement of the Pulley ceases altogether.

The type of brake used may vary, of course, according to the requirements of the particular model on which the device is incorporated, but the screw-operated brake is the best in nearly all cases, for it permits of the gradual application of the retarding effect.

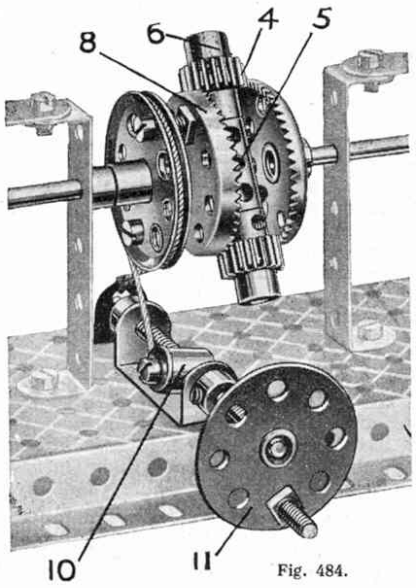

Fig. 484.