New Meccano Model

Printing Machine

THE attractive new model we are describing this month is a machine that will actually print. It is based on a model designed by Mr. F. Davy, Auckland, New Zealand, which won a Prize in the International Model-Building Competition held in 1952/53.

The model will operate satisfactorily using the rubber type supplied in toy printing outfits, but better results can be obtained if standard metal type is used. Model-builders may be able to obtain small quantities of used metal type quite cheaply from local printers.

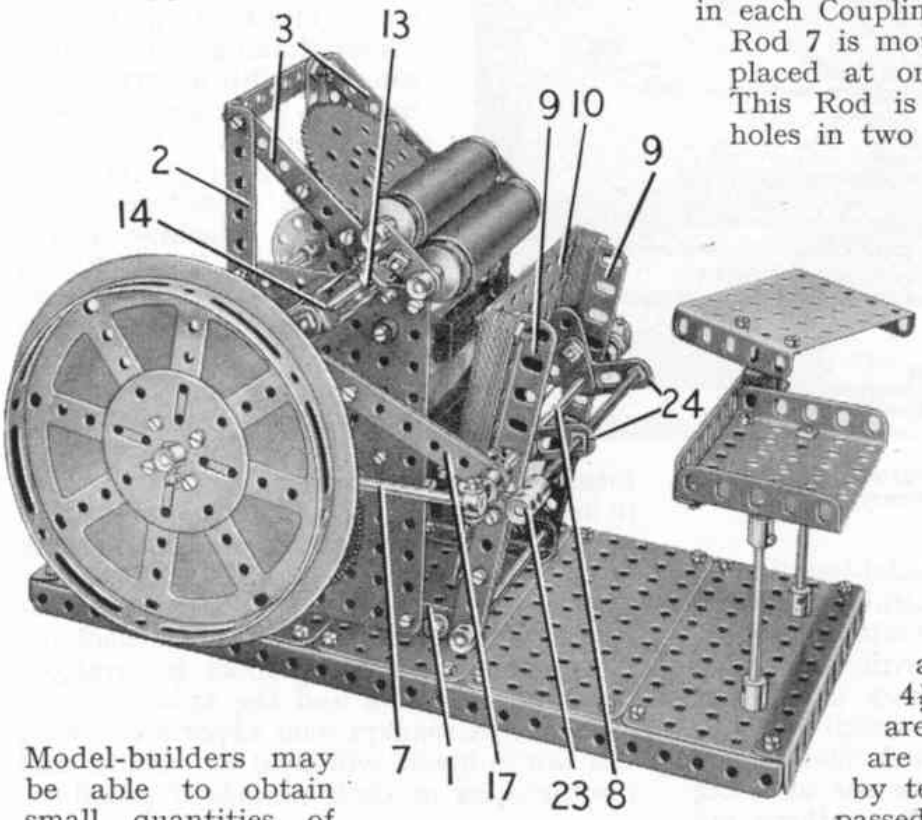

Fig. 1. A fine platen printing machine that really works. It can be used for printing visiting cards and produces a remarkably clear impression when it is properly adjusted.

The base of the model is made by bolting five $5\frac{1}{2}'' \times 2\frac{1}{2}''$ Flat Plates to two $12\frac{1}{2}''$ Angle Girders, with a $5\frac{1}{2}''$ Angle Girder fixed across each end. The main frame is formed by a $5\frac{1}{2}'' \times 3\frac{1}{2}''$ Flat Plate on each side bolted to a $4\frac{1}{2}''$ Angle Girder 1 attached to the base (Fig. 1). The Flat Plate is extended upward by a $3\frac{1}{2}''$ Angle Girder 2 and this is connected to the upper front corner of the Flat Plate by a $4\frac{1}{2}''$ Strip 3. The upper ends of the Girders 2 are connected by a $3\frac{1}{2}''$ Strip, and two $3\frac{1}{2}'' \times \frac{1}{2}''$ Double Angle Strips 4 (Fig. 2) are bolted between the Strips 3. A $1\frac{1}{2}''$ Strip is bolted to each of the projecting ends of the Girders 1 so that the round holes in the Strip cover the slotted holes in the Girder.

The main driving shaft is a $6\frac{1}{2}''$ Rod 5 mounted in Double Arm Cranks bolted to the $5\frac{1}{2}'' \times 3\frac{1}{2}''$ Flat Plates. The Rod is held in place by Collars, and it carries, between the Plates, a Single Throw Eccentric 6, and a $2\frac{1}{2}''$ Gear at each end. A Coupling is mounted freely on a Pivot Bolt fixed centrally in one of the slotted holes in each Gear, and a Rod 7 is held in each Coupling. The other end of each Rod 7 is mounted in a Swivel Bearing placed at one end of a $6\frac{1}{2}''$ Rod 8. This Rod is supported in the slotted holes in two $4\frac{1}{2}''$ Angle Girders 9, each of which is extended downward by two face-to-face $2\frac{1}{2}''$ Strips that pivot on a Rod held in the Girders 1 by Collars. The pressure plate 10 is bolted to the upper ends of Girders 9 and consists of three $4\frac{1}{2}'' \times 2\frac{1}{2}''$ Flat Plates. These are placed face-to-face and are spaced from the Girders by ten $2\frac{1}{2}''$ Strips on each side passed over $\frac{3}{4}''$ Bolts.

The inking plate is a 3″ Sprocket fixed on a $1\frac{1}{2}''$ Rod. This Rod is supported in a $1\frac{1}{2}''$ Strip bolted to the Double Angle Strips 4, and also in a Coupling that is mounted freely on a Rod 11 between a $1\frac{1}{2}''$ Contrate and a Collar. The Contrate engages a $\frac{1}{2}''$ Pinion fixed on the $1\frac{1}{2}''$ Rod, and a $1\frac{1}{2}''$ Strip is placed on Rod 11 between the Collar and a Ratchet Wheel 12. A Pivot Bolt is passed through a Pawl with boss and through an end hole of a 3″ Strip. The Pivot Bolt is then fixed by two nuts to the $1\frac{1}{2}''$ Strip, and the lower end of the 3″ Strip is bolted to the Eccentric 6. The Pawl is held against the teeth of the Ratchet 12 by a Driving Band looped through the hole

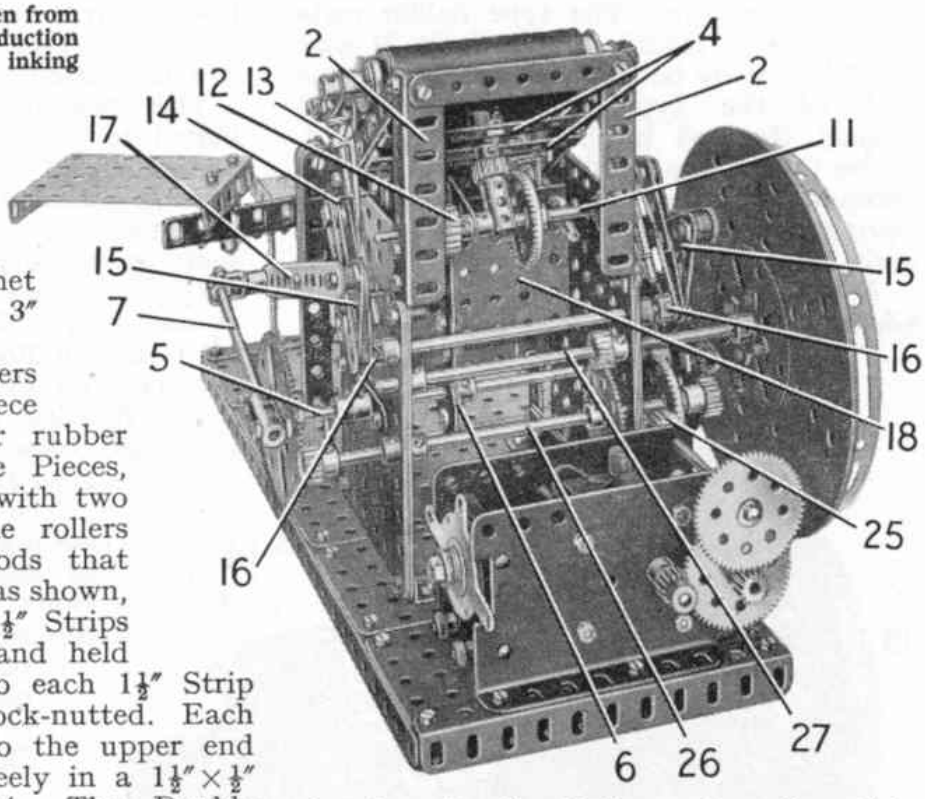

Fig. 2. The printing machine seen from the rear, with the Motor reduction gearing and the drive to the inking plate clearly shown.

in the Pawl and bolted to the 3″ Strip. When the shaft 5 is turned the Eccentric and the ratchet mechanism rotate the 3″ Sprocket intermittently.

Each of the inking rollers is made by pressing a piece of $\frac{5}{8}$″ internal diameter rubber tubing over two Sleeve Pieces, each of which is fitted with two Chimney Adaptors. The rollers are mounted on 5″ Rods that carry $\frac{3}{4}$″ Flanged Wheels as shown, and are connected by $1\frac{1}{2}$″ Strips passed over the Rods and held in place by Collars. To each $1\frac{1}{2}$″ Strip an End Bearing 13 is lock-nutted. Each End Bearing is fixed to the upper end of a Rod that slides freely in a $1\frac{1}{2}$″ × $\frac{1}{2}$″ Double Angle Strip 14. The Double Angle Strip is bolted to a $2\frac{1}{2}$″ Strip, and this in turn is fastened, together with a $1\frac{1}{2}$″ Corner Bracket 15, to a Crank 16. The Cranks 16 on each side are fixed on a Rod mounted in the $5\frac{1}{2}$″ × $3\frac{1}{2}$″ Flat Plates and held in place by Collars. The bearings for the Rod are strengthened by three $4\frac{1}{2}$″ Strips bolted to each Flat Plate. Two face-to-face $5\frac{1}{2}$″ Strips 17 on each side are pivoted on lock-nutted $\frac{1}{2}$″ Bolts fixed in the Corner Brackets 15 by two nuts each, with Washers on the Bolts for spacing purposes. The other ends of the Strips 17 are mounted on Rod 8 between the Swivel Bearings and Collars. It should be noted that the Swivel Bearings are not fixed on Rod 8.

The $\frac{3}{4}$″ Flanged Wheels of the roller shafts run on the edges of Strips 3 and the $5\frac{1}{2}$″ × $3\frac{1}{2}$″ Flat Plates. The Wheels are held in contact with the edges of the parts by 6″ Driving Bands looped between the Cranks 16 and bolts in the End Bearings 13.

The bed for the type is a $3\frac{1}{2}$″ × $2\frac{1}{2}$″ Flanged Plate 18 bolted between the $5\frac{1}{2}$″ × $3\frac{1}{2}$″ Flat Plates. A type holder 19 is made by fixing a $3\frac{1}{2}$″ Angle Girder, strengthened by a $3\frac{1}{2}$″ Strip, along each side of a $3\frac{1}{2}$″ × $2\frac{1}{2}$″ Flanged Plate. The upper flange of this Plate is strengthened by two $2\frac{1}{2}$″ Strips and is connected to the $3\frac{1}{2}$″ Angle Girders by Angle Brackets. Two $2\frac{1}{2}$″ Angle Girders 20 placed together, also are connected to the $3\frac{1}{2}$″ Angle Girders by Angle Brackets, to make an open box $2\frac{1}{2}$″ square

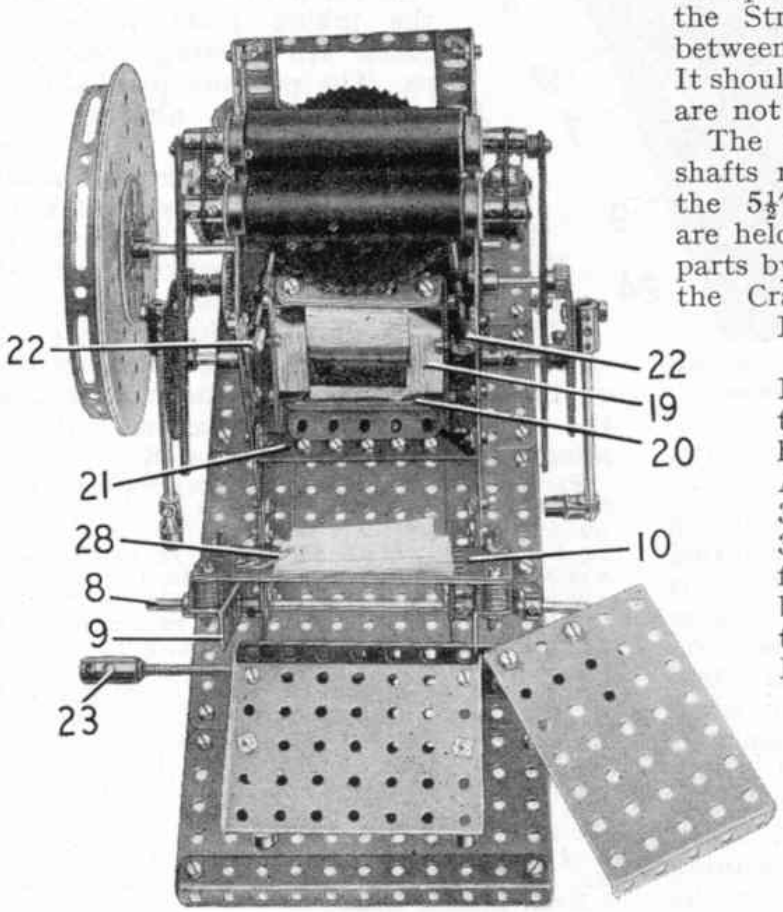

Fig. 3. A semi-plan view of the model, showing the type holder and the way in which it is mounted in the machine.

to hold the type. The type holder rests on a $3\frac{1}{2}'' \times \frac{1}{2}''$ Double Angle Strip 21 and is held on it by bolts as shown. The upper end of the type holder is pressed against the bed by bolts in Collars 22. These Collars are fixed on 2″ Rods passed through the Plate 18. A Compression Spring and a Collar are then placed on each Rod.

A 6″ Driving Band is passed over the Girders 9 and at each end is looped over

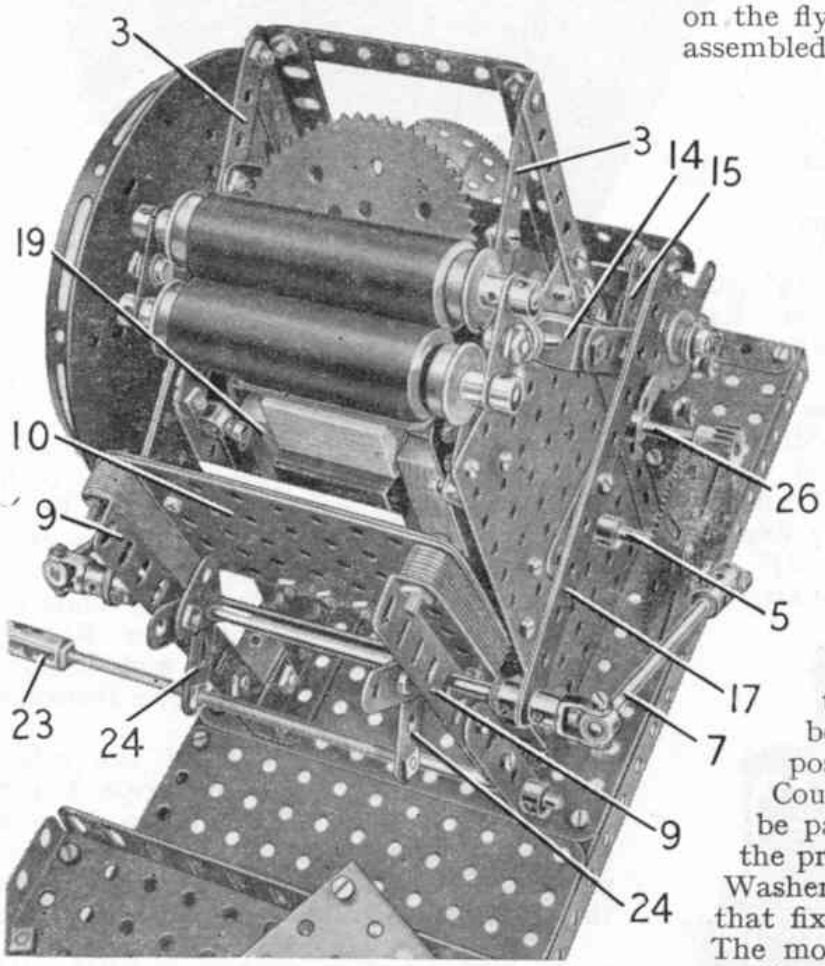

Fig. 4. A close-up of the inking rollers and the crank mechanism that operates the machine.

Rod 8. The Driving Band pulls the pressure plate back to the limit of the slots in the Girders 9, but when printing it is moved forward into the printing position by operating a lever 23. This lever is a Screwed Rod held by nuts in two Bell Cranks 24, which are fixed on Rod 8 as shown. A 1″ Triangular Plate is bolted to each Bell Crank, and when lever 23 is operated these Triangular Plates and the ends of the Bell Crank arms press against the rear face of the pressure plate and force it forward. When the plate is forward it is in the printing position, but by releasing the lever the plate moves backward again and will not print even though the machine is still in motion.

The operating E20R Electric Motor is bolted to the rear of the base (Fig. 2), and is fitted with 16:1 ratio reduction gearing provided by two $\frac{7}{16}''$ diam. Pinions and two 60-tooth Gears. The driving shaft carries a $\frac{1}{2}''$ Pinion 25 that engages a $1\frac{1}{2}''$ Contrate on a Rod 26. A $\frac{1}{2}''$ Pinion at each end of Rod 26 drives one of the $2\frac{1}{2}''$ Gears on Rod 5, and a 57-tooth Gear also fixed on Rod 26 engages a $\frac{1}{2}''$ Pinion on the flywheel shaft 27. The flywheel is assembled from two Face Plates, a Hub Disc and two 6″ Circular Plates.

The model is completed by adding feed and delivery trays as shown, and by placing $\frac{3}{8}''$ Bolts along the lower edge of the pressure plate to support the paper. After printing, the paper is peeled from the type by an Obtuse Angle Bracket 28.

The type can be set up in its holder and fixed tightly in place by inserting wood packing pieces along the sides, top and bottom. The Eccentric 6 must be adjusted on its shaft so that the ratchet mechanism rotates the inking plate while the rollers are passing over the type. The pressure plate should be adjusted by altering the position of the Rods 7 in their Couplings. The pressure plate must be parallel to the type when it is in the printing position, and if necessary, Washers should be placed on the Bolts that fix it to the Girders 9.

The model is prepared for printing by spreading a small amount of printing ink on the 3″ Sprocket. Minor adjustments of the type-holder can be carried out by altering the position of Plate 18.

Parts required to build the Printing Machine: 4 of No. 2; 8 of No. 2a; 3 of No. 3; 1 of No. 4; 28 of No. 5; 6 of No. 6a; 2 of No. 8; 3 of No. 9; 4 of No. 9a; 4 of No. 9b; 2 of No. 9d; 4 of No. 12; 1 of No. 12c; 4 of No. 14; 3 of No. 15; 1 of No. 15a; 1 of No. 15b; 2 of No. 16; 3 of No. 16a; 3 of No. 16b; 2 of No. 17; 2 of No. 18a; 4 of No. 20b; 5 of No. 26; 2 of No. 26c; 1 of No. 27a; 2 of No. 27c; 2 of No. 27d; 2 of No. 28; 136 of No. 37a; 107 of No. 37b; 45 of No. 38; 1 of No. 45; 2 of No. 48; 3 of No. 48b; 2 of No. 52a; 4 of No. 53; 3 of No. 53a; 26 of No. 59; 2 of No. 62; 3 of No. 62b; 3 of No. 63; 1 of No. 63c; 5 of No. 70; 2 of No. 77; 1 of No. 80; 1 of No. 95b; 2 of No. 109; 4 of No. 111; 2 of No. 111a; 13 of No. 111c; 1 of No. 118; 2 of No. 120b; 2 of No. 128; 1 of No. 130a; 2 of No. 133; 2 of No. 146; 1 of No. 147a; 3 of No. 147b; 1 of No. 148; 4 of No. 163; 8 of No. 164; 2 of No. 165; 2 of No. 166; 4 of No. 179; 3 of No. 186a; 1 E20R Electric Motor.