MAKE IT IN METAL

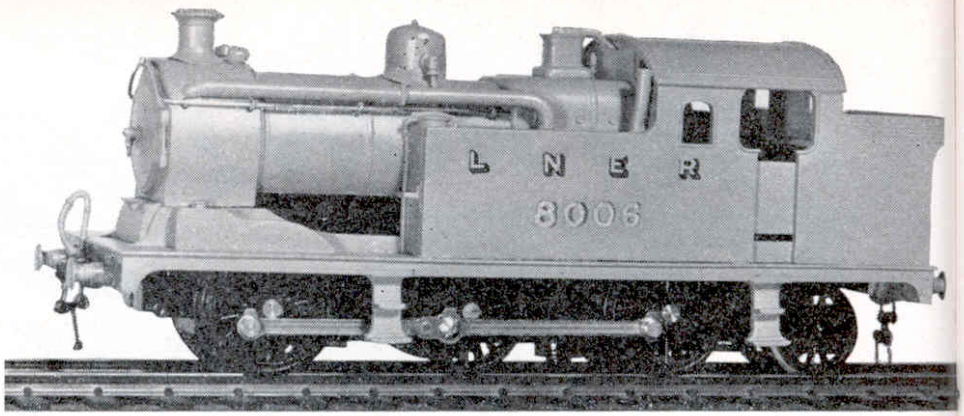

Mike Rickett takes a closer look at metal loco kits—particularly this Wills kit for an N7. It's suitable for almost any layout.

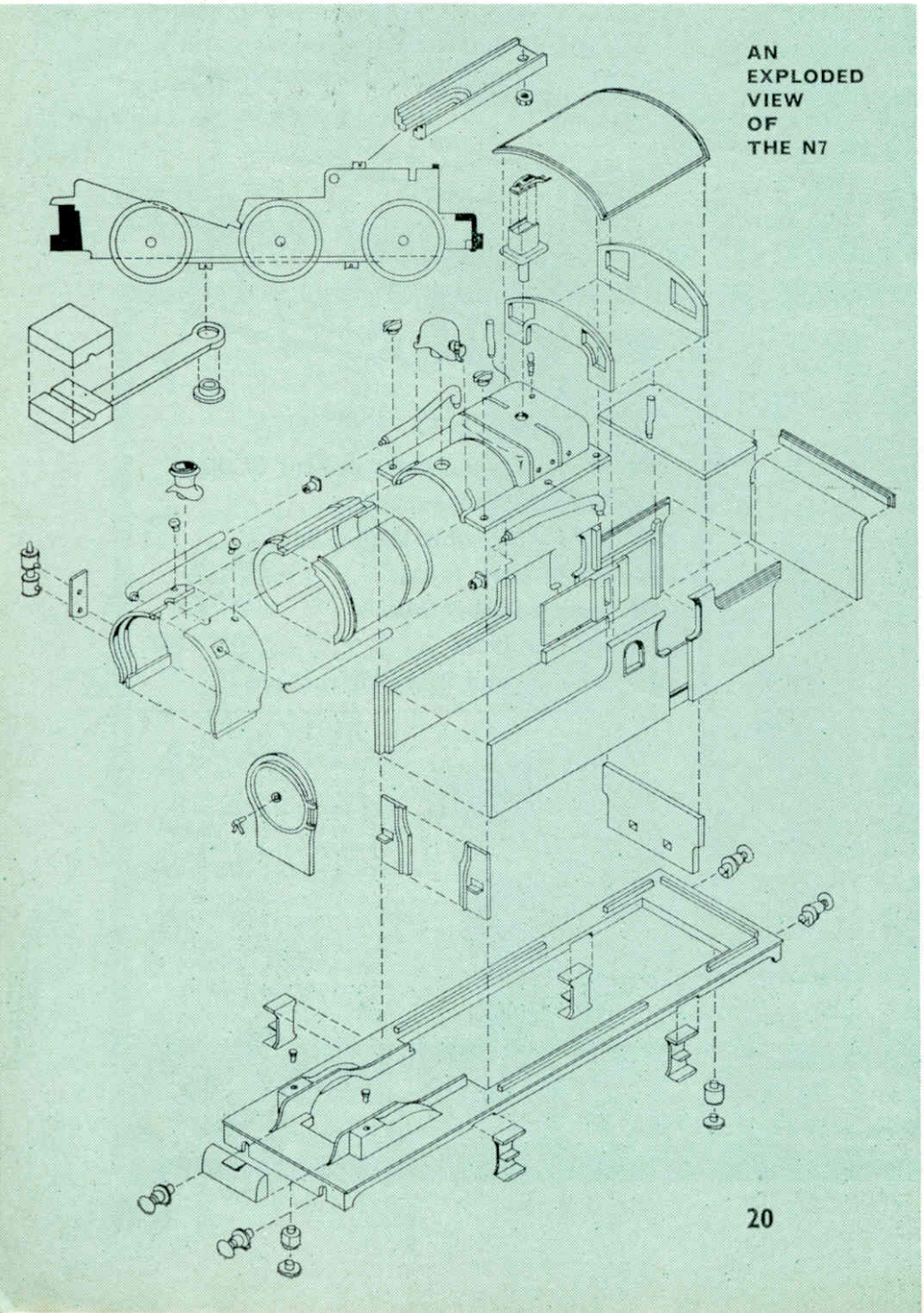

AN EXPLODED VIEW OF THE N7

PLASTIC kits have become, in recent years a recognised means among even the most experienced of enthusiasts, of acquiring many of the essential accessories that a model railway needs. Kits are now made for nearly every conceivable item including a wide variety of locomotives, which can be most useful for building up a more individual locomotive stud than would be possible with ready-made locomotives. But this feature is about *metal* kits. Their method of assembly is basically identical to that of plastic kits except that different adhesives must be used. More than fifty models are produced for 00 gauge by three firms that specialise in metal kits—Wills, Gem and K's—and I intend this month to describe the construction of the recently introduced Wills L.N.E.R. N7 0-6-2T locomotive body kit.

Whereas a number of kits are designed to be used with separately available chassis kits, this kit is one of a large number that are intended to be used with a standard Tri-ang 0-6-0 chassis. These can usually be bought separately from a Service Agent without the corresponding bodies. Slight modification is necessary before the chassis can be used for the N7 by cutting away the shaded areas shown on the exploded drawing.

The tools required to build a white metal body kit are quite simple and have been mentioned before. The most important items are a fine needle file, either round or flat, a modelling knife, a backsaw or razor saw, fine emery paper, drills for cleaning flash from inside holes, an abrasive detergent such as Vim, and a stopper paste. For adhesive any of the contact adhesives such as Evo-stik, Bostik, or Uhu are quite suitable, although, an extra strong bond can be made with Araldite. This does, however, have the disadvantage of being expensive, and it is also very slow setting, unless the join is subjected to a certain amount of heat. Obviously, since the melting of the white metal itself is quite low, too much heat cannot be used but considerably accelerated drying times can be achieved by placing the components over a radiator or similar heat source, the positions of the parts being maintained with Sellotape.

Although no special skills are required in the building of the N7 kit, care is a pre-requisite in every stage of construction. Do not rush the assembly of the kit, for time taken in the beginning will be amply repaid in the finished result.

The Wills N7 kit costs £2 16s. 0d., and includes all the parts required to build a well-detailed locomotive body. Before

beginning assembly, check that no parts are missing and that no pieces are broken or malformed. It is unreasonable to expect the manufacturer to replace or repair a kit that is already half built, and it is worth checking beforehand. Parts that are slightly bent or twisted can easily be dealt with yourself, but do not try to twist the parts back to shape when cold. Immerse them in water as hot as your hands can stand, and then gently persuade them to the correct shape. Once all parts have been checked with the list at the bottom of the instruction leaflet, the cleaning of flash from castings can proceed. Although Wills kits are remarkably free from flash, small pieces of surplus metal are present on many parts, which if left, would mar the appearance of the finished model, and would also make the job of assembly rather more difficult.

The more important parts of the kit that are to be used in the first stages of assembly should be dealt with first. These include the footplate, two cab sides, cab roof, firebox top and the two Tri-ang chassis boiler halves. The flash round the edges of the cab roof should be filed off and any raised portions of metal on the roof surface filed down to make the surface smooth. The beading, or raised piece of metal running round the roof surface can be improved by lightly running the file along both sides of the beading to make it more prominent. Detail of this sort often tends to become slightly obscured when the model is painted, and extra care in making it a little more noticeable is well worth while.

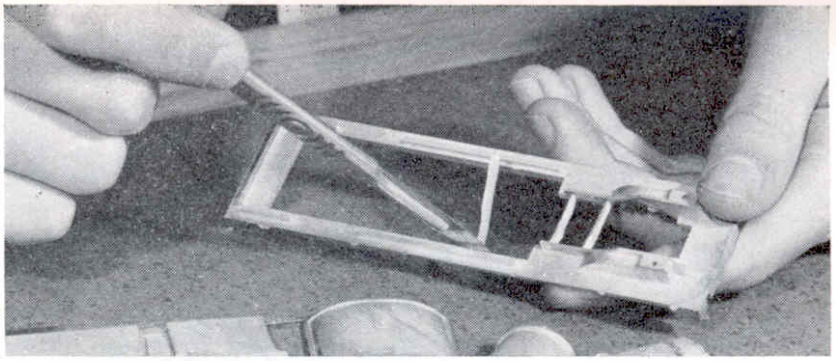

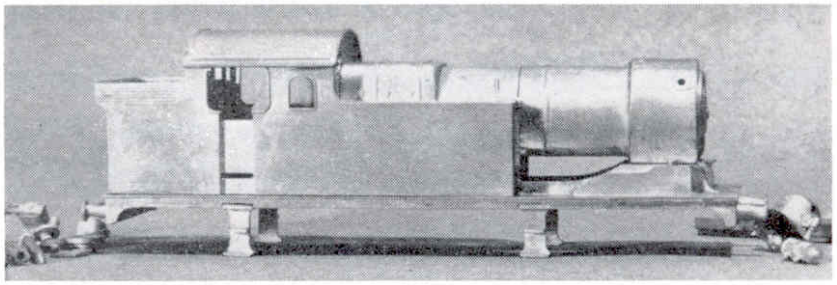

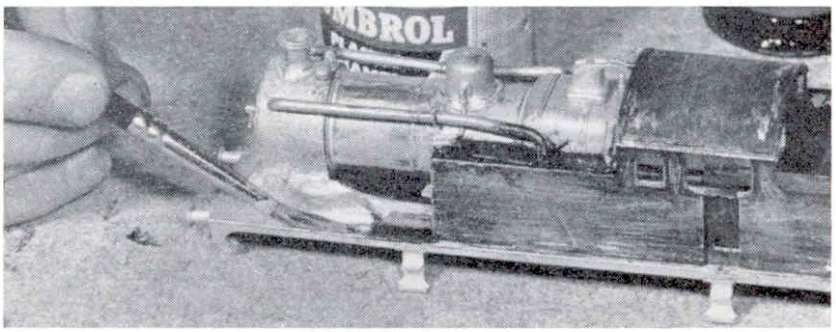

Top picture shows flash being cut away from the footplate. Centre: the complete superstructure with the boiler fittings and other small parts ready for assembly. Above: Primer paint being applied to the completed locomotive body before painting with Humbrol Railway Colours

Flash

The two cab sides can be dealt with in a similar manner, and the flash on the bottom edges of the sides can be pared down with the modelling knife, and then filed. The appearance of the coal rails at the top of the bunker will be improved by carefully deepening the grooves with the knife. Detail such as beading round the cab windows and doors should once again be rubbed gently with the needle file, and the corners of the slit at the bottom of the cab doors filed square. Also clean the tank and bunker ends at each side of the door with the file. Turn both tank sides over to ensure that no projections exist on locating strips of metal running along three sides.

Substantial amounts of flash will be found at both ends of the firebox top, and it will be necessary for this to be cut and filed away at the boiler end of the casting. Both the inside and outside of the boiler must be completely flush, to allow the two boiler halves to be inserted, and for their corresponding upper surfaces to be smooth. The boiler bands on the firebox should be treated in the same way as the beading, especially the one immediately in front of the firebox which is a little indistinct. Blocked holes in the tank tops might also require drilling or gouging out with the end of a needle file.

Flash in the ends of the two boiler halves must be removed with a knife and file, and any projecting pieces of metal on the two boiler bands very carefully filed away. The three pieces of surplus metal between the two sides of the footplate must be removed with a knife, and the pieces of flash on one footplate edge carefully filed down. Some flash will also be found on the inside faces of the splashers.

The first step in the assembly of the model is to glue the two tank and cab sides to the footplate making sure that the bottom edges of the sides lie flush with the footplate. The mechanism mounting bracket can also be inserted at the same time. When using a contact adhesive, remember to spread the glue onto both surfaces, and then after a period of time—usually about 15 min., press the parts together. When the glue has set, the bunker back and coal plate, which may need cleaning with a file, can also be added. When fitting the bunker back be sure that no large gaps are left between it and the bunker sides, by pressing the two sides inwards. The bunker coal plate is fitted behind the cab onto the two strips of metal on the bunker sides. The other important parts, once all extraneous material has been disposed of, can be glued into their respective positions in this order—rear spectacle plate, firebox top, front spectacle plate, and cab roof.

While this assembly is drying, a number of other operations can be attended to, including the assembly of the safety valve lever unit to the safety valve base and the two pipe units to pipe unions. These small parts must be cleaned beforehand with the file—especially the raised lines of flash to be found on many castings. You might also find that the pipe unions will need the hole that runs through them widening to allow the pipe to be connected. These assemblies may also be set aside to dry, and the two tank fronts cleaned and glued into position.

The next step is to glue one of the two sets of boiler pieces together—one for the Tri-ang chassis, and one for a scale chassis. The smoke box castings, including the smokebox door, when glued together, is fitted before the boiler pieces, and I found that it was better to assemble the two boiler halves and the smokebox separately, and then to glue the two pieces onto the loco.

Finishing

It is probably easier to fill all cracks in the locomotive at this stage than to wait until it is complete. For this a stopper such as Belco Cellulose Putty is ideal, and should be placed in cracks with a pin, afterwards smoothed over, and when dry, filed flush. An epoxy stopper such as Plastic Padding or Bondafiller is also highly recommended.

Other parts can now be added in any order, and a 57 drill used for holes in the boiler for handrails. Once all parts have been added, and excess glue cleaned off with a file or pin, the complete locomotive can be given a scrub up with a stiff solution of Vim rubbed on with an old toothbrush. This removes the inevitable finger-deposited grease which will prevent good paint adhesion.

When the locomotive is dry, the first coat of paint is applied. This is only intended to act as a primer, and you may

Continued on page 47