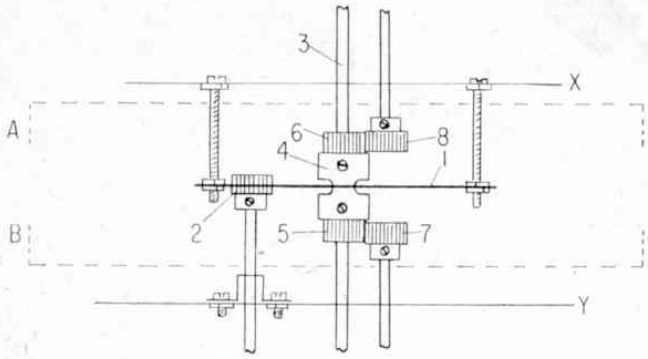

A diagram of the transmission system developed by Mr. Stan Evans of Prenton, Birkenhead for transferring a triple drive from a base-mounted gearbox to the swivelling top section of models such as Dockside or Tower Cranes. Letters A and B represent the roller race flanges, letter X the underside of the swivelling top section and letter Y the top of the fixed base section.

on this Rod, inside the Gear Ring, is a Socket Coupling 4 in each end of which a ½ in. Pinion is carried, Pinion 5 at the lower end and Pinion 6 at the upper end. This whole assembly is free to turn on the Rod. Meshing with Pinion 5 is another ½ in. Pinion 7 on a Rod bringing the drive from the base source, while a further ½ in. Pinion 8 collects the drive from Pinion 6 and transmits it through suitable linkage to another desired top-section movement. Pinions 6 and 8 operate on the "sun and planet" system so that, no matter how the top section slews, they always remain in mesh. The accompanying diagram is partially "exploded", but it clearly shows the layout of the gearing and the drive transmission principles involved.

PARTS REQUIRED		
5—26	4—111d	1—171
12—37b		1—180

'Hydraulic' Ram

For our final offering this month we have yet another product from the fertile brain of Mr. Pat Lewis of Formby, Lancs. On this occasion, Pat has come up with a first-class working simulated hydraulic ram: "simulated" because it is not actually hydraulic, but "working" because it operates on the ram principle—and extremely effectively, at that! Furthermore, it has all the appearances of a hydraulic unit and can be made to operate smoothly and quickly when powered by a motor. The mechanism is ideal for use in advanced models of hydraulic diggers and excavators, etc., and, in fact, Pat has mounted it on a typical digger arm for our purposes. The arm is built up in two sturdy sections from suitable Girders joined by Flat Plates, the main section being pivotally attached to the secondary section six holes from the end of the second section.

(Continued on page 597)

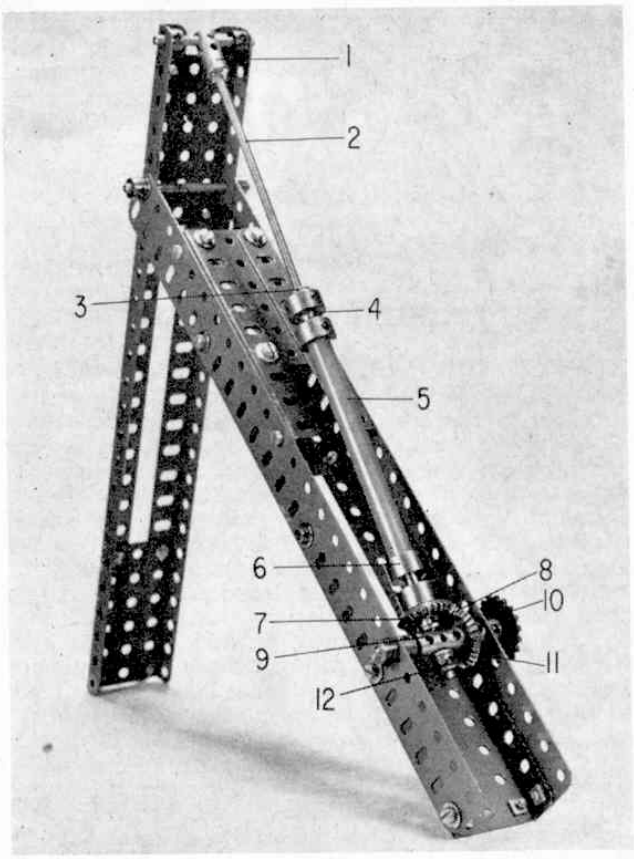

Highly realistic in appearance, but screw-operated, this simulated hydraulic ram for hydraulically-operated Excavator and Digger models was designed by Pat Lewis of Formby, Lancs.

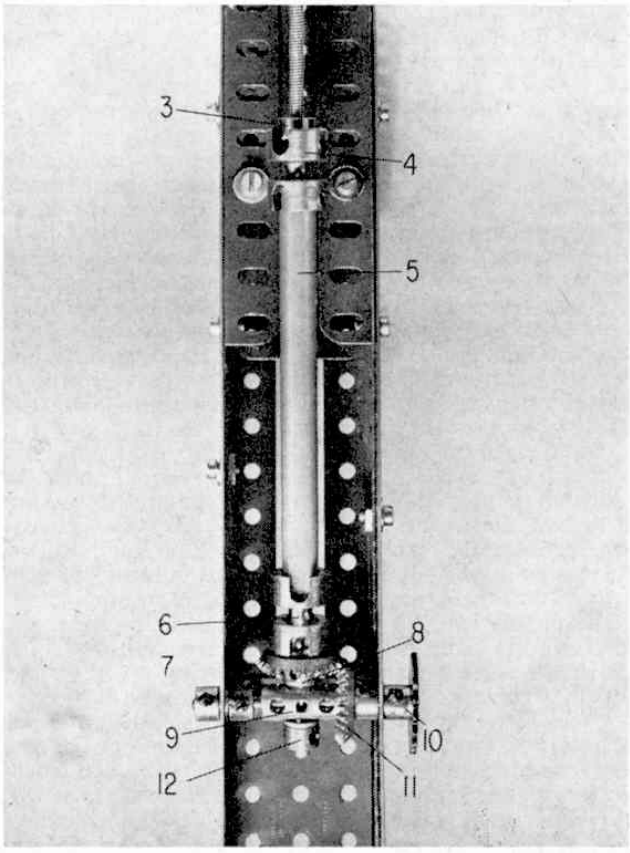

A close-up view of the "ram" showing its uncomplicated, but extremely effective construction.

Dinky Toy No. 251 U.S.A. Police Car. Based on the Pontiac Parisienne, this new Dinky has all sorts of additional features.

terior and competition numbers. Speedwheels, the obvious choice for a Dinky Racer are fitted as standard, the wheels, themselves, carrying wide racing tyres at the rear. Finish is in flamboyant red, with gleaming black doors, matt black front panel and a moulded white interior.

A novel touch to add greater realism to the model and to greatly increase the fun for the collector is a sheet of water-slide "advertisement" transfers sold with the Alfa and intended to be added to the model in suitable positions. Most racing and rally cars, these days, are literally plastered with "stickers" advertising the companies or products which sponsor them and now the Dinky Toy collector can provide sponsors for his own model. Five pairs of names are included—Ferodo, Trico, Bosch, Lucas, and Dunlop and the effect they give when added to a model is remarkable. All the names are leaders in their fields and the new Dinky, also, will be a winner all the way!

AMONG THE MODEL BUILDERS *with* SPANNER *(from page 593)*

Journalled in the end of the secondary section is a 2 in. Rod, in the centre of which a Threaded Coupling 1 is fixed, the Rod passing through the end transverse bore of the Coupling. Fixed by a Nut in the threaded longitudinal bore of the Coupling is a 6 in. Screwed Rod 2 on which a Threaded Boss 3 is carried, this Threaded Boss being secured in one end of a Socket Coupling 4. Held in the other end of the Socket is a *Plastic Meccano* 4½ in. Axle Rod 5, on the lower end of which a second Socket Coupling 6 is secured. Fixed in the free end of this Socket Coupling is a ⅞ Bevel Gear 7, in the boss of which a 1½ in. Rod is held. A Spacing Collar 8 is mounted on this Rod, the Rod then being journalled in the centre transverse bore of a Coupling 9 carried on two 1 in. Rods inserted into the ends of the Coupling and mounted in the sides of the main arm section, where one is held in place by Collars and the other by a 1 in. Sprocket Wheel 10 and a ⅞ in. Bevel Gear 11. This Bevel Gear meshes with Bevel Gear 7. The 1½ in. Rod is free to turn in the central bore of Coupling 9, being prevented from sliding out of the bore by a Collar 12.

Under the operating conditions, a Chain drive is taken to Sprocket Wheel 10 which, in turn, drives the Bevels and, with them, the Socket Coupling/Plastic Meccano Rod arrangement. As Threaded Boss 3, held in the upper Socket Coupling, revolves, the Screwed Rod is "screwed" up or down, thus providing the ram action. The Screwed Rod, incidentally, fits perfectly inside the hollow centre of the Plastic Meccano Axle which, itself, fits perfectly inside the two Socket Couplings. This, therefore, is another excellent example of how "metal" and Plastic Meccano, together, can be put to very good use.

PARTS REQUIRED
(Excluding Digger Arm)

1—17	1—37b	1—63c	2—171
1—18a	2—38	1—64	1—Plastic
2—18b	6—59	1—79a	Meccano
2—30	1—63	1—96	4½ in. Axle Rod

Don't forget! Any pieces or parts you lack can be bought separately from our model shop advertisers with a big M in their advertisements—there's one in your part of the country. . . .