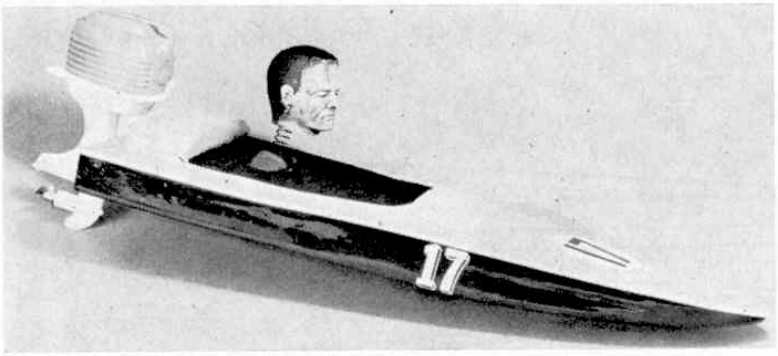

HEIDI

Full-size drawings for a simple model electric outboard speedboat

HERE'S a nice little boat that can be built from $\frac{1}{16}$ in. and $\frac{1}{8}$ in. balsa wood and uses a small Japanese Gakken outboard motor, available from RipMax (U.K. price 63p).

The first step is to cut out the two halves of the bulkhead H1 and the keel from $\frac{1}{8}$ in. balsa. The two halves are then cemented into position as shown in the plans, making sure they are 90 deg. to the keel. Next, the transom, which is also cut from $\frac{1}{8}$ in. balsa, is glued to the end of the keel. The gunwale shelf is then cut out and positioned on to the keel and bulkhead, after making sure they are flat and aligned properly. After this assembly has dried work can begin on the planking, and for this plenty of pins are needed, to hold the wood in place while the glue dries, as the $\frac{1}{16}$ in. balsa will have to be bent against the grain. Using the straight edge of the balsa plank, cut out a side panel of the same shape but slightly longer than the drawing.

Position the straight edge on the underside of the gunwale shelf and glue the inner surface of the panel to the bulkhead and transom. When glueing these two side panels in position it would be advisable to start at the stern and work your way forwards, glueing and pinning in stages, as balsa cement dries very quickly, and you may find parts fail to stick in places, and sometimes do not show until you start sanding the finished model. This procedure is then repeated for the other panel on the other side. After the glue has thoroughly dried, the protruding edges can be trimmed and sanded to the correct shape.

Now work can begin on the bottom of the hull, which is carried out in much the same way as the sides. Cutting the shape of the hull slightly oversize and making sure one side is straight, position the straight edge to cover the centre of the keel and working in stages as before, glue it to the keel and supports. Trim the centre to run along the middle of the keel. This is then repeated on the other side, first trimming the edge to butt neatly up to the first panel, and when the glue has dried the outer edges are trimmed with a sharp knife or razor blade. The bow is formed by two scrap pieces of $\frac{1}{8}$ in. balsa stuck together and stuck either side of the keel.

Having completed all this, the top of the bulkhead is cut from $\frac{1}{8}$ in. balsa and glued on the gunwale shelf, in line with the lower half. Now the curved section on top can be tackled by, again, cutting the $\frac{1}{16}$ in. balsa oversize on either side and cementing and pinning in place. It should finish about 3 in. from the stern, and the two ends either side of the cockpit are twisted and pinned and cemented flat on to the gunwale shelf; later they can be blended into the shelf by sanding. The little hump behind the cockpit is optional but is typical of these boats and adds to the appearance.

The model can now be sanded smooth and given three or four coats of clear dope or sanding sealer to protect the wood, and after this has dried it can be given a light sand with wet and dry paper, and finally painted.

The character in the boat is the head off one of those refillable sweet containers. To this head was glued a weak spring and then this assembly was glued to the base. Although it has no functional value, it does look rather amusing bobbing backward and forwards, as the boat pitches over ripples.

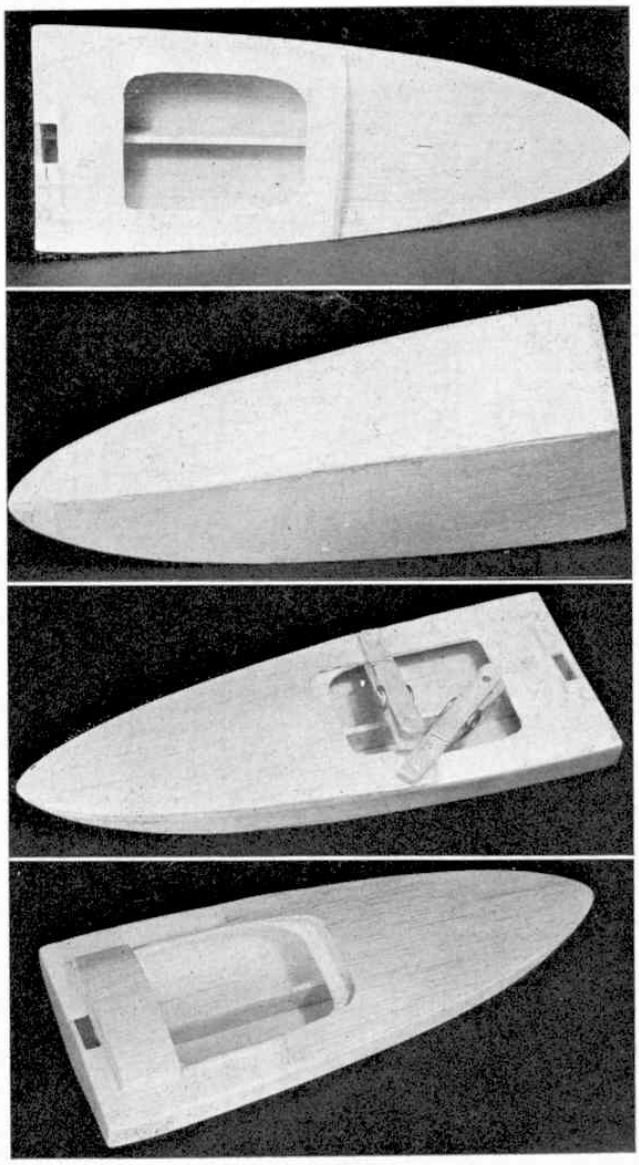

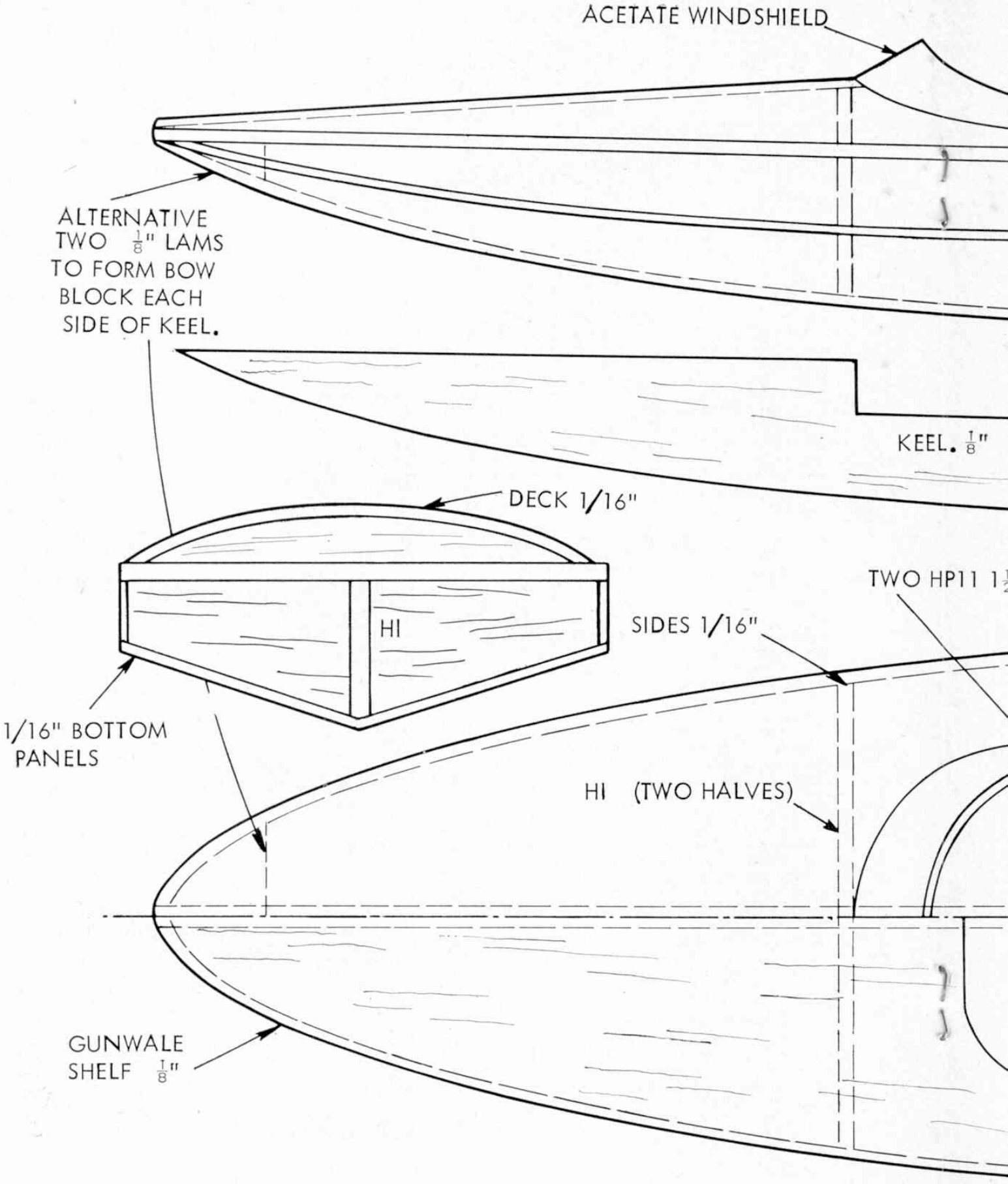
ACETATE WINDSHIELD
ALTERNATIVE TWO 1/8" LAMS TO FORM BOW BLOCK EACH SIDE OF KEEL.
KEEL. 1/8"
DECK 1/16"
HI
TWO HP11 1
SIDES 1/16"
1/16" BOTTOM PANELS
HI (TWO HALVES)
GUNWALE SHELF 1/8"

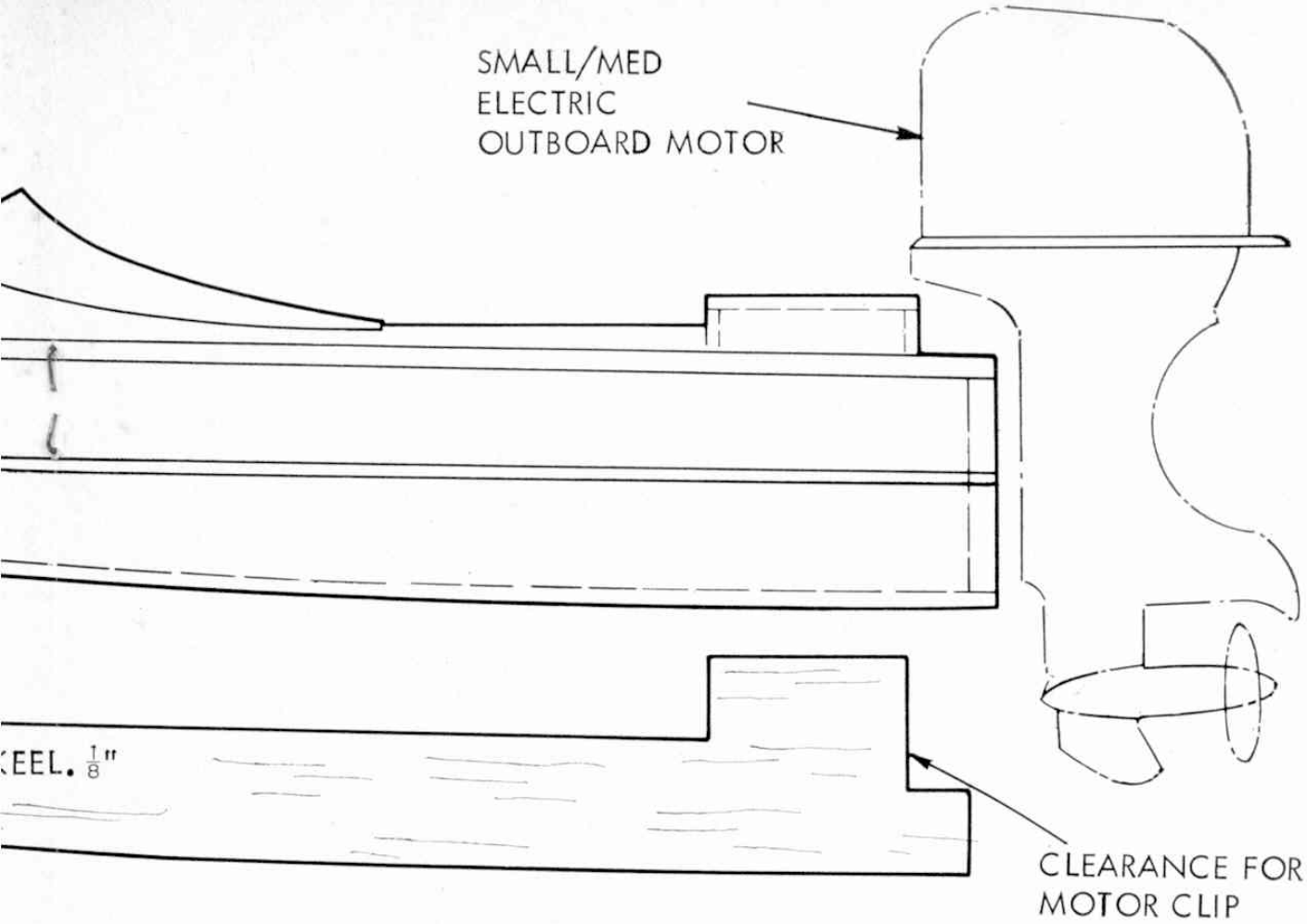
SMALL/MED
ELECTRIC
OUTBOARD MOTOR
KEEL. 1/8"
CLEARANCE FOR
MOTOR CLIP

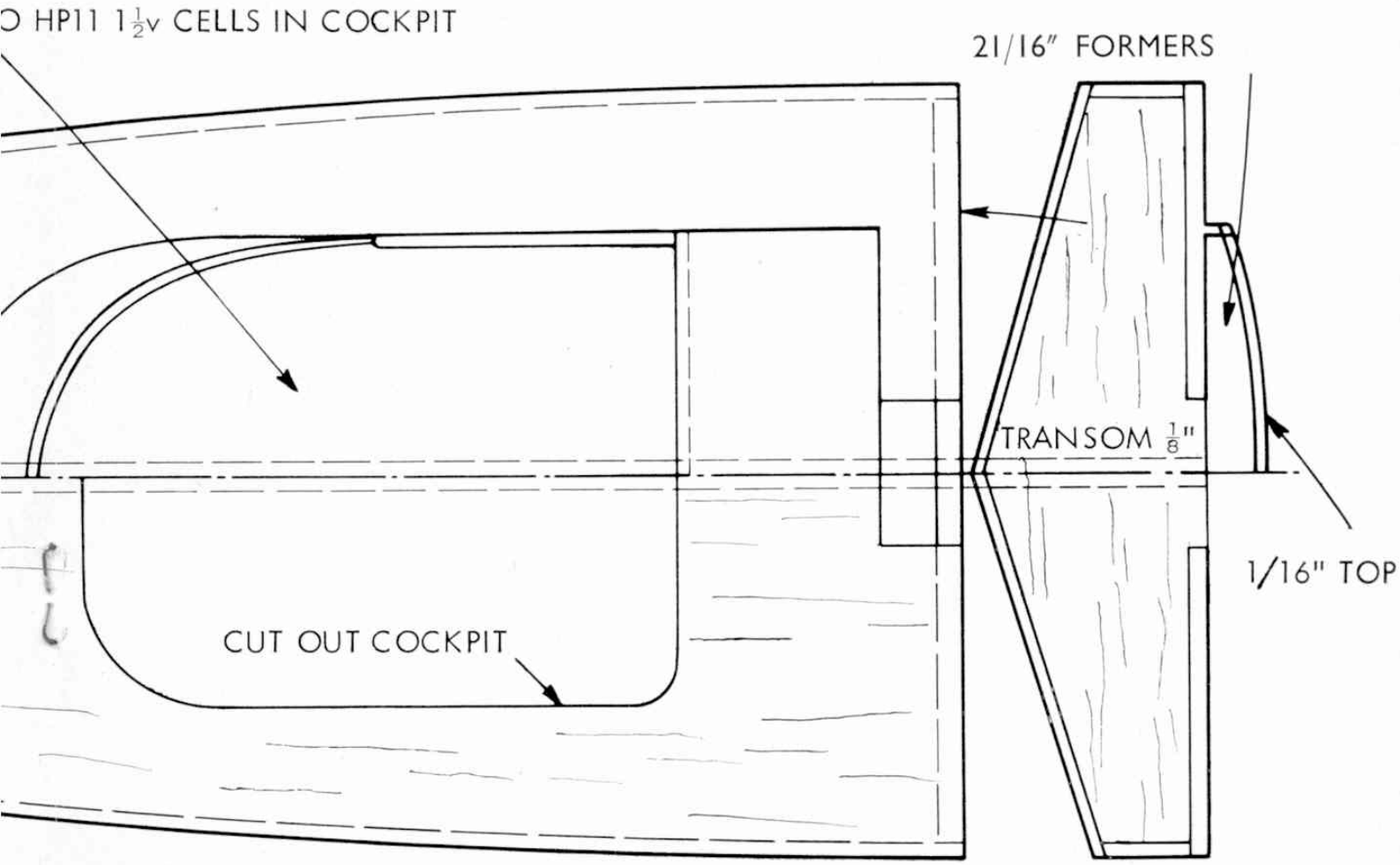
O HP11 1½v CELLS IN COCKPIT
21/16" FORMERS
TRANSOM 1/8"
1/16" TOP
CUT OUT COCKPIT