SELF-WINDING UNIT

described by "Spanner"

NON-STOP RUNNING FOR CLOCK KITS

WITH FEW exceptions, the Meccano Clock Kits introduced last year have been very well-received by Meccano enthusiasts the world over. Properly built, they work well and do the job admirably for which they are intended. Indeed, the only noticeable criticism which has been levelled against them – and this by non-Meccano modellers – is that they run for a limited length of time on one winding.

This, of course, is not a criticism levelled by the majority of modellers, who accept that the joy of the Clock Kits is in the personal satisfaction obtained from building and successfully operating a real, working timepiece. They do not expect, nor necessarily want, all the attributes of a professionally-produced chronometer – especially for the price! Nonetheless, it would be foolish to suggest that extra-long running characteristics would not be advantageous and, for this reason, the Unit illustrated here will be of special interest, not only to builders of a Clock Kit, but also to the builder of any weight-driven Meccano Clock. It is a self-winding mechanism which gives non-stop operation for as long as life remains in the batteries.

Our thanks for the mechanism go to leading Meccano expert, Giuseppe Servetti of Piacenza, Italy. Mr. Servetti, in fact, deserves double thanks as, not only did he design the mechanism, but he also built the actual Unit illustrated here specially for the MMQ during an extended visit to Binns Road in July. The Unit can be used with both the No. 1 and the No. 2 Clock although the Clock must first be modified slightly to operate from a Sprocket Chain drive, instead of the original Cord drive. When used with the basic No. 1 Clock, the Winding Unit is sufficiently heavy, as built, to serve as the driving weight, but some extra weight may be necessary if used with the No. 2 Clock.

As regards construction, two 9½" Angle Girders 1 are bolted as shown to a Battery Box, the securing Bolts also fixing two 1½" Strips 2 between the Girders through their second and fourth holes. The opposite ends of the Girders are extended four holes upwards by a 3" x 1½" Flat Plate 3, the securing Bolts in this case passing through the second holes in the Girders and the lower corner holes of the Plate. A second 3½" x 1½" Flat Plate 4 is attached to the first Plate by a ½" Reversed Angle Bracket at the upper left-hand corner only, the lower corners being attached to Girders 1 by further Reversed Angle Brackets.

Frontal view of the Self-winding Unit by Mr. Servetti of Piacenza, Italy.

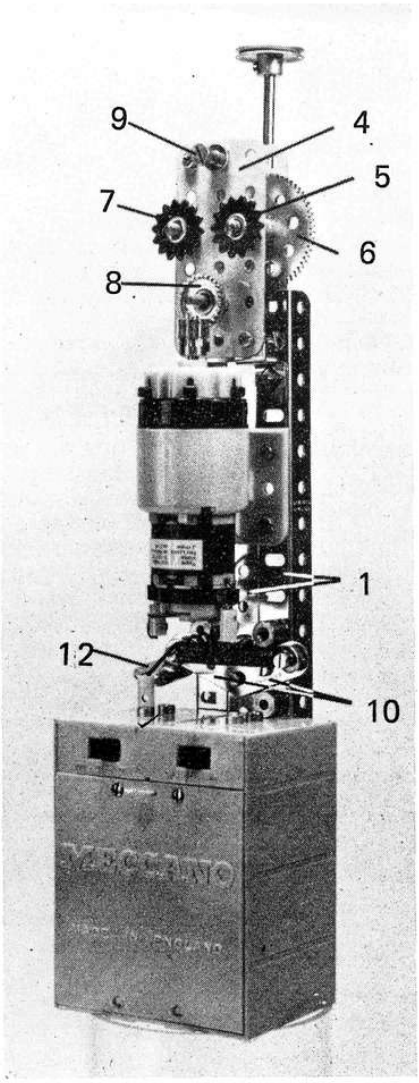

Journalled in the two Flat Plates are three 1½" Rods, two in the third row (from the top) end holes in the Plates and one in the fifth row centre holes. A ¾" Sprocket Wheel 5 and a 60-teeth Gear Wheel 6, the latter positioned between the Plates, are carried on the upper right-hand Rod, as it appears in the photograph, while an idler ¾" Sprocket 7 is mounted on the upper left-hand Rod. The lower Rod carries a ¾" Contrate Wheel 8 and a ¾" Pinion, this Pinion positioned between the Plates and engaging with Gear Wheel 6. A Pivot Bolt 9 is locked in the top row centre hole of the front Flat Plate.

A switch is next built up from two 1½" Strips 10, overlapped one hole and lock-nutted to a 7½" Strip 11, the securing 3/8" Bolt also helping to fix a 1" x ½" Angle Bracket by its end hole in the long lug to the reverse side of the Strip. The short lug of the Bracket faces the upper end of the unit. Strips 10 should pivot freely. Tightly fixed by its short lug to the outer end of left-hand Strip 10 is a second 1" x ½" Angle Bracket 12, this being held in place by two Nuts on the shank of a 3/8" Bolt. The boltshank should not project completely through the inner Nut. Another 3/8" Bolt is held by Nuts in the end hole of right-hand Strip 10 and stretched between this and the left-hand Bolt is a Tension Spring.

A ½" Bolt is held by a Nut in the centre hole of right-hand Strip 1, then the assembly is positioned in the Unit with the shank of this Bolt located free in the ninth hole from the lower end of right-hand Girder 1 and with Strip 11 positioned between both Girders 1 and under Strips 2. Strip 11 should slide up and down in the "guides" provided by Girders 1

and Strips 2 and, as it does so, the movement should activate the switch, causing the lug of Angle Bracket 12 to make or break contact with the inner 12 volt terminal of the Battery Box. Stops to prevent excessive movement of Strips 10 are provided by three Threaded Bosses, two secured to right-hand Girder 1 through its eighth and tenth holes and one to the left-hand Girder through its tenth hole.

Now bolted to the front of Girders 1 through their fifth and seventh holes from the top is a Motor-with-Gearbox, output shaft upwards, the lower securing Bolts also fixing a 1½" Strip behind the Girders to serve as an upper guide for Strip 11. Note that the 1½" Strip is spaced from the Girders by a Washer on each Bolt. Strip 11 is then extended upwards by an 8" Rod fixed in a Rod Socket which is in turn secured to the spare lug of the 1" x ½" Angle Bracket bolted to the back of Strip 10. A 1" Pulley 13 is fixed on the upper end of the Rod, while a 7/16" Pinion is mounted on the output shaft of the motor, this meshing with Contrate Wheel 8. The motor gearbox is set in the 60:1 ratio.

The Self-winding Unit under operating conditions driving a No. 1 Clock.

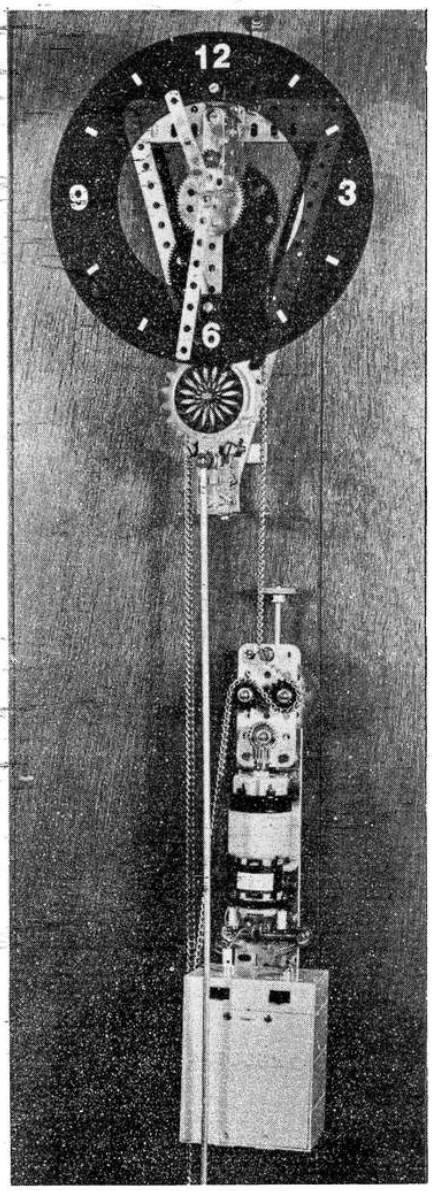

WIRING AND MOUNTING

Wiring the finished mechanism is the height of simplicity: one motor terminal is earthed by running a wire from it to left-hand Girder 1, while the other motor terminal is connected to the outer 12 volt terminal of the Battery Box.

Setting up for operation is almost as easy. Referring to the No. 1 Clock, for instance, the driving clutch in the Clock is removed and replaced by a 2" Sprocket Wheel. A long and "endless" length of Sprocket chain – sufficient to allow the winding chain to reach the floor – is then looped over this Sprocket and round Pivot Bolt 9 and Sprockets 5 and 7 in the winding Unit. (see accompanying diagram). Finally, a small tensioning weight is provided at the lower end of the chain loop to hold it steady and this can be provided by a 1" Sprocket on a 1" Rod Journalled in the upper ends of two 3½" Strips, between the lower ends of which a number of 2½" Strips are "sandwiched".

In operation, the Unit, because it serves as the clock driving weight, gradually drops as the clock winds down. When it reaches the floor, Strip 11 trips built-up switch 10 which activates the motor and causes the complete Unit to "climb" up the Sprocket Chain. At the top, Pulley 13 makes contact with the clock frame and the motor is switched off. Simple, yet marvellous! It may be necessary, incidentally, to bolt a suitable "buffer" – such as a Plate – to the clock frame to make contact with Pulley 13 in the Winding Unit. And one last point: if the Battery Box is not available, a simple battery container could easily be built up from Meccano Parts to take its place.

A diagram (representative only) showing method of arranging driving chain.

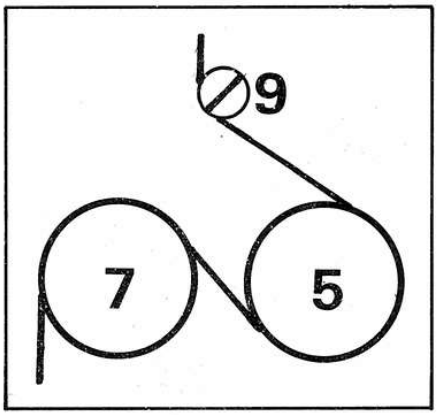

PARTS REQUIRED

1- 1b	1-22	21-37b	1-111a
5- 6a	1-25	14-38	3-111c
2- 8a	1-26c	1-43	3-125
2-12b	1-27d	1-59	1-179
1-13a	1-29	3-64	3-612
3-18a	27-37a	2-96a	1-620
Connecting Wire			

The Unit viewed from the rear. Note Strips 2 holding Strip 11.

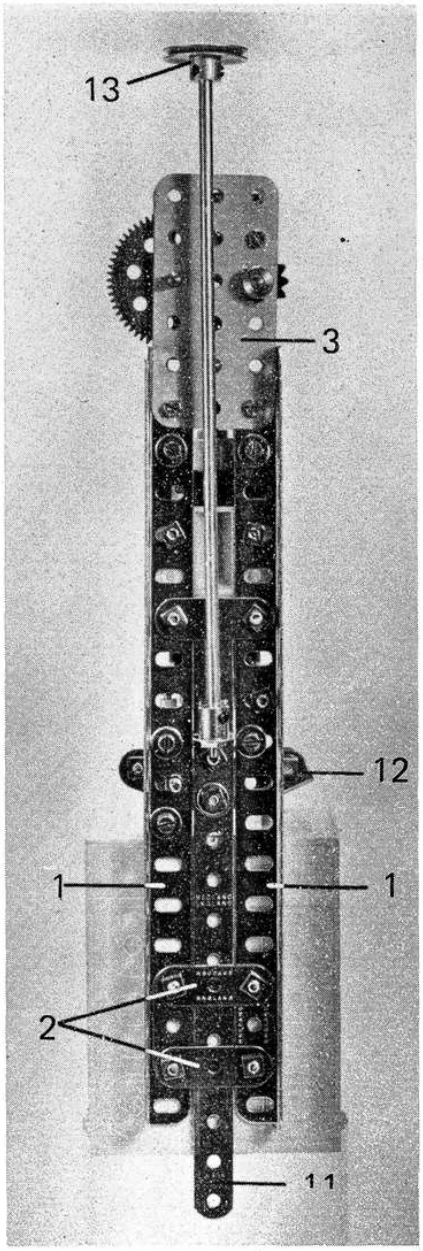

A Self-Winding Balance Wheel Clock

entirely in Meccano

By Ron Fail, introduced by 'Spanner'

EXAMPLES of clock building in Meccano over the past five years have shown staggering advancement under the clever hands of such veteran time-piece constructors as Pat Briggs, Leslie Dougal and Ron Fail. Once again I am very pleased to be able to present a fine example of Ron's work in which he pulls off another " First " in Meccano Magazine by creating, probably for the first time, a clock with the hairspring movement of a pocket watch entirely in standard Meccano parts! As Ron says, his clock will work in any position being entirely independent of gravity so it will even work out in space. With the aid of Bert Love's photographs the clock is not difficult to build and is, of course, a complete timepiece.

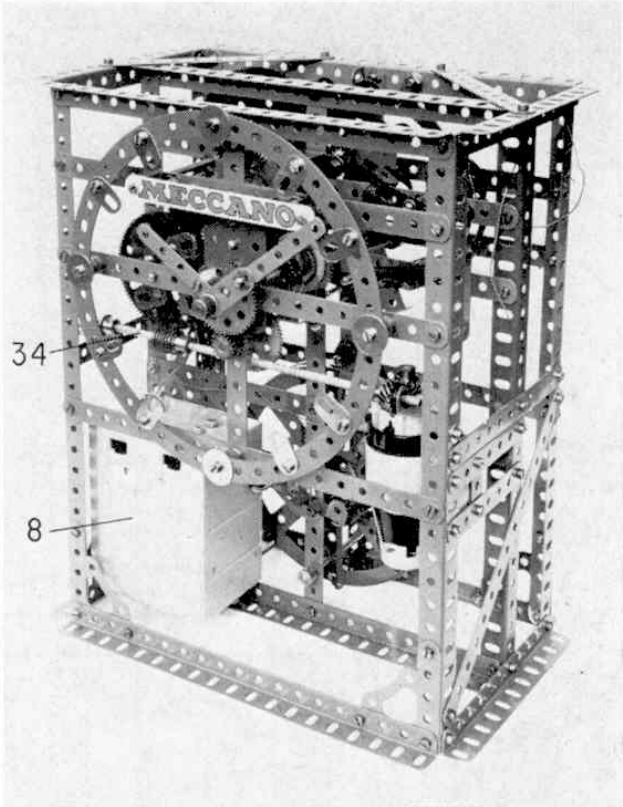

Main Frame

A rectangular framework as shown in Figs. 1 and 2 is built up from 5½ in., 9½ in., and 12½ in. Perforated Strips and Angle Girders. The general construction is clear from the photographs. The Escapement is mounted between the 12½ in. Angle Girders 1 and 2 by means of Electrical Pivot Bolts 3, 4 and 5 on the rear Girder 1 and a corresponding set of Pivot Bolts on the inner Girder 2. The top Pivot Bolt is covered by the Double Bent Strip 7, see Fig. 3, and forms the rear journal for Axle Rod 56. The second Pivot Bolt on the inside Girder is also in line with shaft 61 carried in a 1 in. Reversed Angle Bracket mounted immediately below the Pivot Bolt. Fig. 4, which shows the hairspring arrangement, also shows the bottom Pivot Bolt in the centre hole of the Flat Trunnion 6. Battery Box 8 is bolted to the 5½ in. × 2½ in. Flat Plate 9.

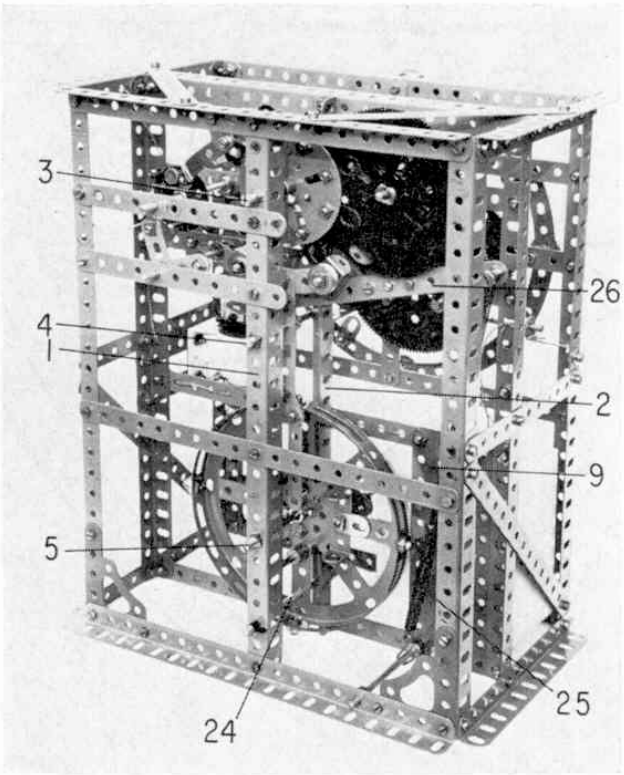

Escapement

A rear view of the complete escapement, removed from the clock, is shown in Fig. 5. The escapement wheel consists of a Faceplate 10 fitted with eight Fishplates. (Electrical Insulating Fishplates can be used to give quieter running). The Faceplate is secured to a 2 in. Pivot Rod together with a ½ in. Pinion in front.

The lever is built up from a 3 in. Strip 11, with a 2½ in. Curved Strip 12 at the top and a 1 in. Triangular Plate 13 at the bottom. Two 2½ in. Narrow Strips are bolted to the Triangular Plate, leaving a slot between the Strips in which fits an Adaptor for Screwed Rod 16 on the balance wheel. The pallets consist of ½ × ½ in. Angle Brackets 14 bolted through their elongated holes to the Curved Strip. The bolts also hold ½ in. metal Pulleys 15 which serve to balance the lever, the completed lever being mounted on a 2 in. Pivot Rod by means of a Double Arm Crank.

The balance wheel is a Hub Disc also mounted on a 2 in. Pivot Rod by means of a Bush Wheel. Adaptors

Above, Fig. 1. A general frontal view of the Author's Self-Winding Balance Wheel Clock. When correctly adjusted, it will operate successfully in any position.

Left, Fig. 2. Assembly of the main framework of the model is evident from this rear view of the Clock. Note the positions of the balance wheel escapement.

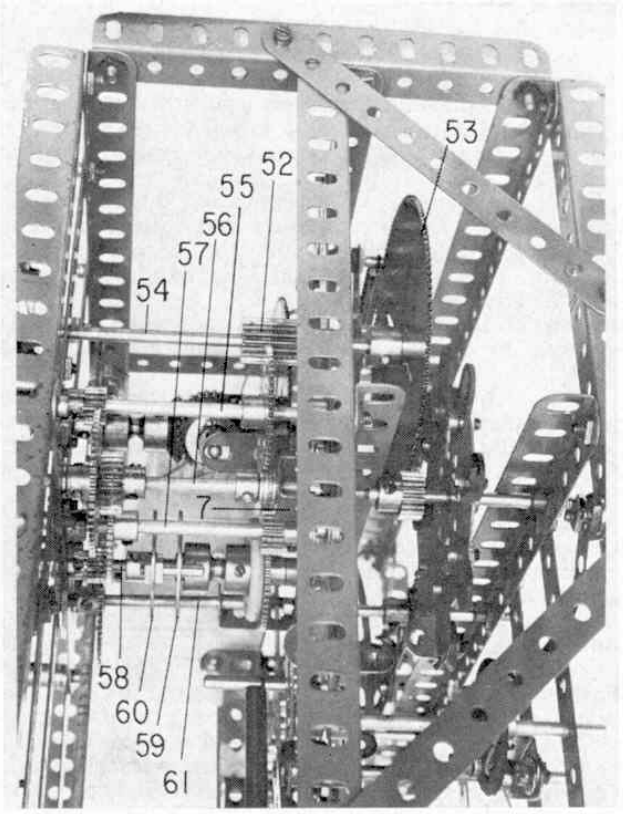

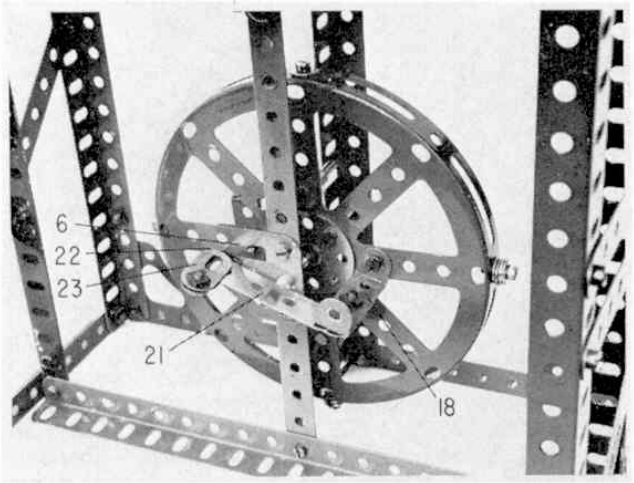

Left, Fig. 3. A top view of the model showing the main gearing arrangement.

Above, Fig. 4. A close-up view of the balance wheel showing the hairspring arrangement. Note the Washers stacked on the balance wheel for timing regulation.

for Screwed Rod 16 and 17 are bolted to the Hub Disc, the upper one engaging in the slot in the lever, and the lower one acting as a balance weight. A $1\frac{1}{2} \times \frac{1}{2}$ in. Double Angle Strip 18 is bolted to the front of the Hub Disc and again is balanced by attaching a second Double Angle Strip 19 and Fishplate 20 to the back of the Hub Disc. Balancing and timing weights, each consisting of a $\frac{3}{8}$ in. Bolt and three Washers, are attached to the top, bottom and each side of the balance wheel.

Perhaps the most important part of the Clock is the hairspring which consists simply of a 2 in. Electrical Flexible Strip 21. A $1 \times \frac{1}{2}$ in. Angle Bracket 22 is bolted to Flat Trunnion 6 and one end of the Flexible Strip is clamped to it by means of Fishplate 23. The other end of the Flexible Strip is similarly clamped to Double Angle Strip 18. The various parts should be adjusted so that the Flexible Strip is straight and symmetrical, passing through the axis of the balance wheel and just clear of the head of the Pivot Bolt. While fitting the hairspring and, later, when adjusting the balance weights, the balance wheel should be locked by passing a Rod 24 through it and through Girders 1 and 2.

Winding Gear

The clock is driven by three Tension Springs 25 bolted together in series and attached to lever 26 by a Pivot Bolt. This spring is automatically re-tensioned at frequent intervals.

Maintaining the drive to the clock during the re-tensioning is done through the differential mechanism shown in Fig. 6. The carrier consists of Coupling 27 with two $\frac{7}{8}$ in. Bevel Gears free to rotate on 1 in. Rods fixed in the longitudinal bore of the Coupling, and located by Collars. The carrier is connected to $3\frac{1}{2}$ in. Gear 28 by $1 \times \frac{1}{2}$ in. Angle Brackets. Bevel Gear 29 is connected to $2\frac{1}{2}$ in. Gear 30 by Socket Coupling 31 and this unit, as well as the complete carrier (including Gear 28), is free to rotate on 4 in. Rod 32. Bevel Gear 33 is fixed to this Rod.

Lever 26 is built up from a $3\frac{1}{2}$ in. Strip, a $5\frac{1}{2}$ in. Strip and a Double Arm Crank overlapped so that seven holes project in one direction and five in the other. The lever is fixed to Rod 32 and the spring attached to the short end. The long end operates the switchgear.

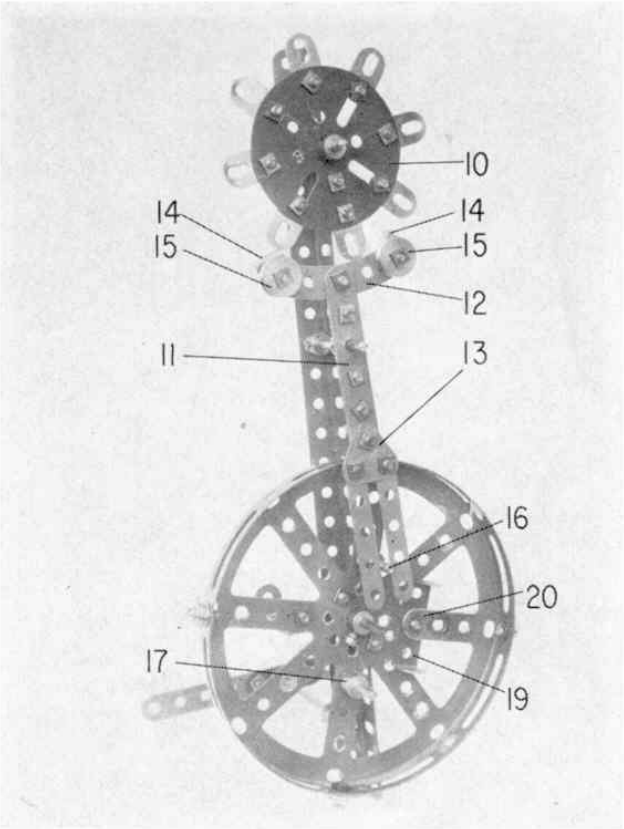

Right, Fig. 5. The full escapement mechanism as it appears removed from the model.

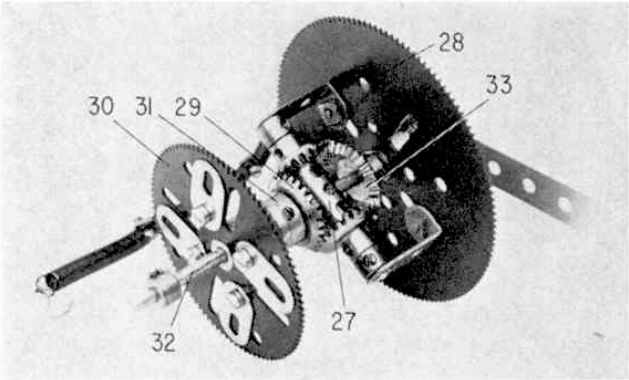

Left, Fig. 6. The differential winding gear, shown here removed from the model.

The winding mechanism is driven by a Motor with 6-speed Gearbox via a pair of ½ in. Helical Gears, an 8 in. Rod 34 and a Worm engaging with Gear 31. Rod 34 is journalled in a pair of 1 in. Reversed Angle Brackets bolted to the main frame. The Fishplates bolted to Gear 31 are intended to reduce noise due to " ringing " of the Gear.

The lower end of the main spring is hooked on to a 3½ in. Rod in the base girders of the main frame. The spring is not vertical, its inclination helping to keep the driving torque constant.

Switch Gear

The first part of this mechanism is assembled on 3½ in. Rod 35, as shown in Figs. 7 and 8. One end of Tension Spring 36 is attached to Crank 37 by a Pivot Bolt and the other end to a Long Threaded Pin on the main frame. A 2½ in. Strip is bolted to the main frame and carries a pair of ½ × ½ in. Angle Brackets 38 which limit the movement of the Crank. A 1½ × ½ in. Double Angle Strip 39 is bolted to a second Crank 40, also fixed on Rod 35. The switchgear is operated by a lever 26 pushing alternately against the ends of the Double Angle Strip. Finally, a Bell Crank 41, with a ½ × ½ in. Angle Bracket 42 on each arm, is fixed to Rod 35.

The switch consists of an Insulating Bush Wheel 43 fitted with two Contact Studs 44 and 45 and, opposite these, a Threaded Pin 46 and (for balance) a ⅜ in. Bolt 47. This unit is fixed on 3½ in. Rod 48 together with a Double Arm Crank 49. 1 × ½ in. Angle Brackets 50 limit the movement of the switch, which is operated by Angle Brackets 42 pushing Threaded Pin 46.

A 2 in. radius Wiper Arm 51 is fitted to the main frame by a Fishplate and is adjusted so that it slides from one Contact Stud to the other as the switch operates. The Wiper Arm must be in electrical contact with the main frame.

One of the Motor leads is connected directly to the Battery Box, the other to Contact Stud 45. The remaining Battery Box terminal is connected to the main Frame.

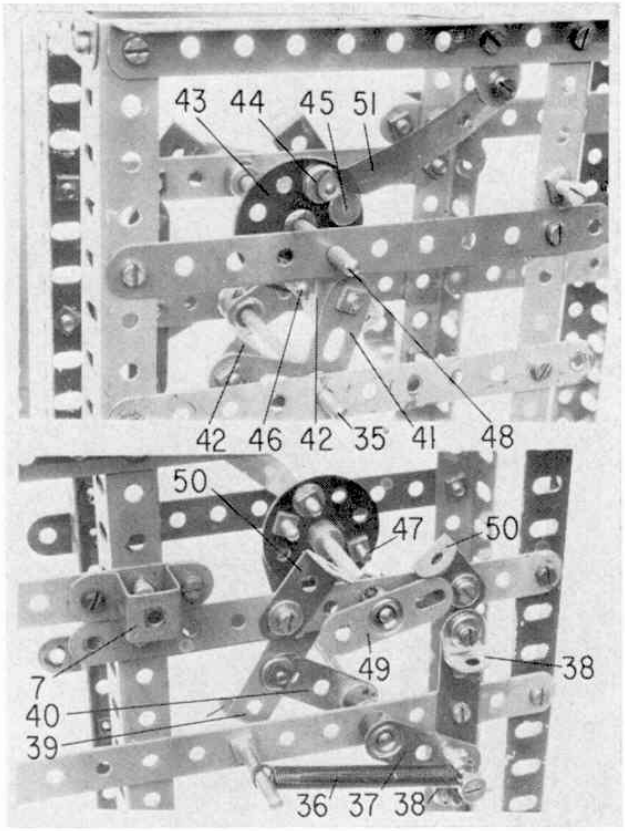

Main Gear Train

Collars are required to locate some of the Rods and Washers used to ensure proper meshing of the Gears and these are generally not mentioned in the following description. A ½ × ¾ in. Pinion 52 and a 3½ in. Gear 53 are fixed on Rod 54. The 3½ in. Gear meshes with a ½ in. Pinion on the escapement wheel Pivot Rod. The ½ in. Pinion 52 meshes with the differential carrier Gear 28 and also with a 57-teeth Gear on a 3½ in. Rod 55, this Rod also carrying a 7/16 in. Pinion which drives a 60-teeth Gear on a 3 in. Rod 56. Also fixed on this Rod is a ¾ in. Pinion which meshes with a 50-teeth Gear on a 3½ in. Rod 57, this latter Rod also carrying a ½ in. Pinion which drives a 57-teeth Gear, free to rotate on the minute hand 4½ in. Rod 58, located by a Collar fixed behind it.

A friction clutch, enabling the hands to be set, is arranged as follows. A Bush Wheel 59 is connected to a 1 in. Pulley with Rubber Ring by a Socket Coupling. Bush Wheel 60 is fitted with a pair of threaded Pins and fixed to Rod 58. A Compression Spring between the two Bush Wheels presses the Rubber Ring against the 57-teeth Gear. A 7/16 in. Pinion is fixed to Rod 58 in front of Bush Wheel 60 and drives a 60-teeth Gear on 3 in. Rod 61. The minute hand is a 3½ in. Narrow Strip bolted to a Crank fixed on the front of Rod 58. The hour hand is a 2½ in. Narrow Strip bolted to a 57-teeth Gear which is free to rotate on Rod 58. Washers are used to space the hands and the 57-teeth Gear carrying the hour hand is driven by a ½ in. Pinion on the front end of Rod 61. The clock dial is a 7½ in. Circular Strip, embellished with ¾ in. Washers and Fishplates, and attached to the main frame by four Threaded Bosses spaced with Washers.

Adjusting the Timekeeping

Since it is impossible to make small precise changes to the hairspring, the Clock is regulated by altering the number and position of Washers bolted to the rim of the balance wheel. This is the usual practice for precision watches and clocks. The four sets of three Washers already mentioned in the description of the

Left top, Fig. 7. A close-up view of the switch gear as seen from the back of the Clock. Bottom, Fig. 8. Another view of the switch gear as seen from the front.

escapement should provide a reasonable starting point. Removing Washers will cause the clock to run faster while the addition of Washers will slow it down. If necessary, Electrical Thin Washers will provide a fine adjustment.

It is also desirable to retain good timekeeping regardless of the position of the Clock, and this can be achieved as follows. Suppose the Clock is found to run faster when upside down than when it is right-way up. This will be corrected by transferring one or more washers from the top of the balance wheel to the bottom. Similarly if it runs faster when lying on its left side than on its right side, washers should be transferred from the left side of the balance wheel to the right.

When correctly built and adjusted, the Clock will keep very good time—in any position!

PARTS REQUIRED

5—1a	1—22	3—48	1—126a
3—1b	2—23b	1—57d	1—128
7—2	3—24	12—59	1—145
3—3	1—25	3—62	2—147b
1—4	3—26	3—62b	1—155
1—5	1—26b	1—63	2—171
2—6a	2—26c	4—64	2—173a
8—8	1—27	1—70	2—211a
6—8a	3—27a	1—73	3—235
4—9	2—27b	1—77	1—235b
24—10	1—27c	1—90	1—514
6—12	2—27d	4—108	1—530
4—12b	4—30	1—109	1—533
1—13a	1—32	16—111c	2—544
2—15a	133—37	2—115	6—545
1—15b	60—38	1—115a	3—549
5—16	4—38d	1—118	1—Motor with 6 speed Gearbox
2—16b	4—43	1—120b	
2—18b	1—45	3—124	1—Battery Box

. . . and for owners of a No. 4 set, Bert Love describes a

SEASIDE TRAM

M.M. readers will have had a chance to admire the excellent Bondi Tram built by Colin Campbell which was published in the April Magazine. Such a tram, however, may be beyond the scope of many younger readers, but those younger readers may take heart in seeing that a perfectly satisfactory and realistic tramcar can be built from one of the smaller standard Meccano Sets. The Seaside Tram featured here is built with the No. 4 Set only, and yet it captures much of the atmosphere of its subject. Construction is quite straightforward and aims at utilising nearly all the parts in the Set, with the utmost economy in employing each Nut and Bolt to the full extent.

The only features which require careful modelling are the round ends to the driver's compartments and these should be tackled first. One end is made from a pair of $2\frac{1}{2} \times 2\frac{1}{2}$ in. Flexible Plates 1 secured together by overlaying their slotted holes in the middle with a $2\frac{1}{2}$ in. Strip 2. The centre Bolt is $\frac{3}{8}$ in. and carries a $\frac{3}{4}$ in. Washer and a 1 in. loose Pulley 3, forming the headlamp. The upper Bolt is also $\frac{3}{8}$ in., but carries a lock-nut to allow the Bolt shank to protrude outside the tram body so that the loop of the trolley arm cord can be secured to it. The upper Bolt traps a $2\frac{1}{2} \times 1\frac{1}{2}$ in. Transparent Plastic Plate in place to serve as the windscreen and also carries an Angle Bracket inside, to which a $2\frac{1}{2}$ in. Semi-circular Plate 4 is later attached.

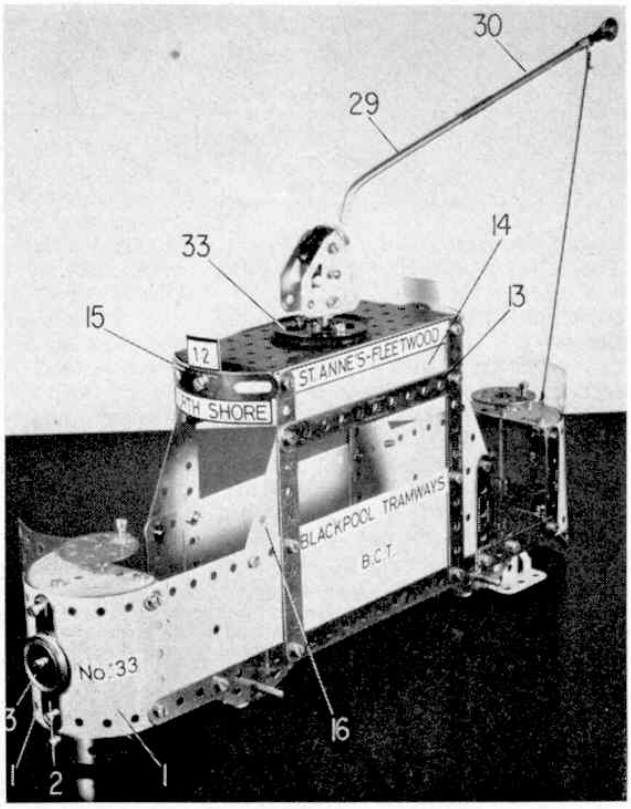

Meccano Set No. 4 contains all the parts needed to build this delightful model of a Seaside Tram, designed and built by B. N. Love.

At this stage the curved form of the tram ends may be carefully shaped by bending the flat Flexible Plates gently but firmly, using a springing action of the hands rather than any attempt to make a sharp bend in one go. Such latter action will produce creases, or ugly bends instead of a smooth curve. The second tram end is fashioned in a similar manner, but the owner of the No. 4 Set will be obliged to use Part Nos. 199 and 200. Both of these are $2\frac{1}{2}$ in. square Flexible Plates, but the 199 has a sharp-radius bend, which must be eased out, while the No. 200 has a gentle bend which is not far off that required in the final form. When the two ends have been satisfactorily shaped, the side portions of the tram body may be assembled to them. The rounded ends of the tram will assume their final shape when tightly bolted up to the side frames.

Side Frames

Both side frames of the model are similarly built up from a $4\frac{1}{2} \times 2\frac{1}{2}$ in. Flexible Plate 5, bolted to the left-hand side Plate 1 in one of the curved end assemblies, the two Plates being overlapped two holes. The upper securing Bolt also holds an Angle Bracket in place, this Bracket later being attached to Semi-circular Plate 4, while the lower securing Bolt holds a $12\frac{1}{2}$ in. Strip 6 outside the Plates and another

News and Ideas for Meccano Model-Builders

By "Spanner"

A Meccano Clock's Fine Record

Many of my older readers will remember the fine Grandfather Clock that was described and illustrated in a Super Model Leaflet that was available between the wars. It was a model that attracted a lot of attention from advanced model-builders and hundreds were built by those who were fortunate enough to possess all the Meccano parts required in its construction. It was an excellent timekeeper and I know of many of these Clocks that have been in use for some years. Recently, however, I heard of one such Clock that is still going strong after almost continuous running for over a quarter of a century! It was built over 25 years ago by Mr. Ernest Alvis, Eastleigh, Hants., when he was a youth, and it is still working as well and as accurately as ever! Even the original escapement mechanism is still in action, and has not been altered or parts replaced since the day it was made. Mr. Alvis is now married and has a boy of his own. Alan is 13 years old, and is seen standing alongside this record-breaking Clock in the picture on this page. While the fine performance of this Clock is undoubtedly an excellent testimonial to the durability and precision of Meccano parts, its long working life is also largely due to the standard of construction and workmanship put into the assembly of the model by Mr. Alvis, and I would like to take this opportunity to congratulate him on his achievement.

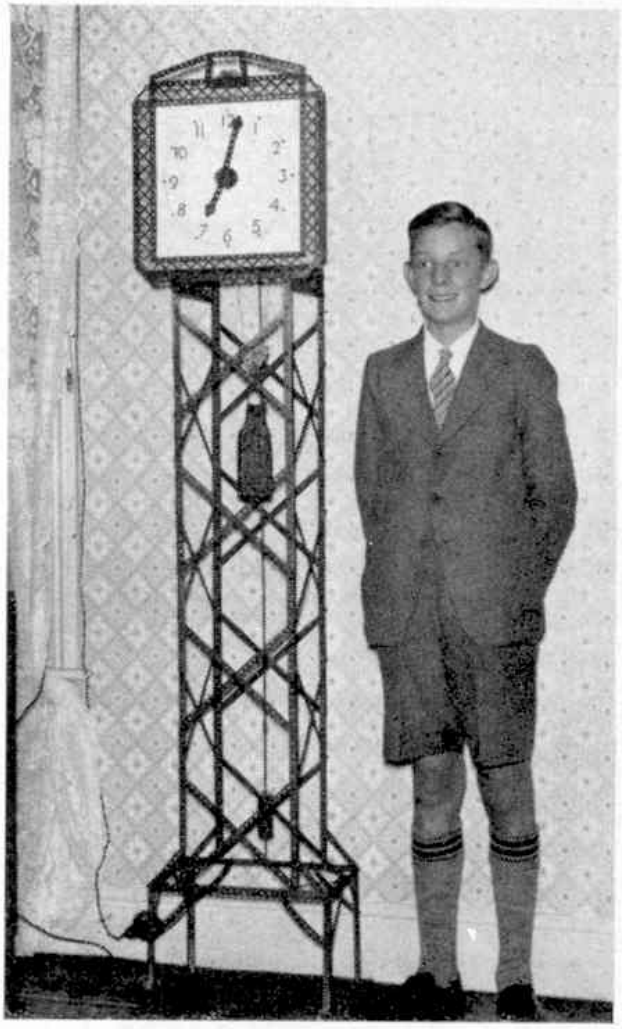

The Meccano Grandfather Clock built by Mr. E. Alvis, of Eastleigh, 25 years ago. Alongside is his 13-year-old son, Alan.

A Mechanism of Interest to Crane Builders

Readers who like building cranes and have the necessary parts to enable them to go in for the larger types should find the winding mechanism shown in Fig. 1 of interest as it is quite easily adaptable to suit particular requirements.

It will be seen that the shaft of the winding handle 1, carrying a ½" Pinion 2, is engaged at one end by a 3½" Strip 4. The latter is bolted to the framework at 5 and is bent out a little to allow a Collar and a Washer to be placed on the shaft between the Strip and the frame of the gear-box. The Strip 4 thus serves as a spring and tends to retain the operating shaft in such a position that the Pinion 2 is out of engagement with the Gear Wheel 3 on the winding drum shaft. Consequently, in order to rotate the drum, the handwheel 1 must be pressed inward while it is rotated; immediately it is released the Strip 4 returns it to its former position, throwing the Pinion 2 out of gear with the Gear Wheel 3. On the other end of the drum 6 a Flanged Wheel 7 and a Bush Wheel 8 are mounted. These form a small brake drum around which a cord brake band 9 is wound. One end of the band is tied to a Flat Bracket mounted on a Rod 10, and the other end is given a few turns round the Rod, and is secured to a Bolt inserted in a Collar on Rod 10.

On operation of the handle 11, the Rod 10 winds up the Cord 9, so exerting a

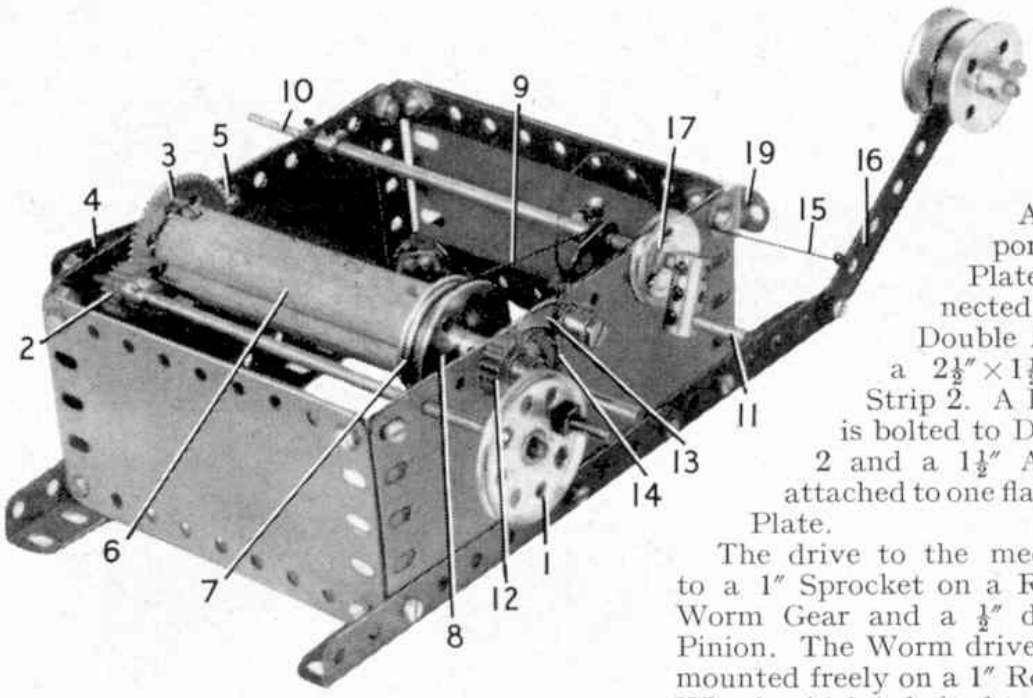

Fig. 1. A winding mechanism for cranes.

braking effect on the winding drum. A Ratchet Wheel 12 is fixed to the shaft of the latter and is engaged by a Pawl 13. The necessary pressure is imparted to the Pawl by a piece of Spring Cord 14. The Cord 15 tied to the Pawl is connected to a weighted lever 16, and is guided over a 1″ loose Pulley 17 that rotates freely on Rod 10.

Normally the weighted lever 16 rests against a stop 19 and in this position allows the Pawl to engage the Ratchet Wheel 12. If the arm 16 is released from the stop and moved backwards however, the Cord pulls the Pawl clear of the teeth of the Ratchet and so leaves the winding drum free to rotate.

An Automatic Reversing Mechanism

Details of the automatic reversing device shown in Fig. 2 were sent to me some time ago by Mr. G. Bowker, Bolton. The mechanism base plate is a $3\frac{1}{2}'' \times 2\frac{1}{2}''$ Flanged Plate with a $3\frac{1}{2}''$ Angle Girder bolted to each of its longer edges. The Angle Girders support $3'' \times 1\frac{1}{2}''$ Flat Plates, which are connected by a $2\frac{1}{2}'' \times \frac{1}{2}''$ Double Angle Strip 1 and a $2\frac{1}{2}'' \times 1\frac{1}{2}''$ Double Angle Strip 2. A Double Bent Strip is bolted to Double Angle Strip 2 and a $1\frac{1}{2}''$ Angle Girder 3 is attached to one flange of the Flanged Plate.

The drive to the mechanism is taken to a 1″ Sprocket on a Rod that carries a Worm Gear and a $\frac{1}{2}''$ diameter, $\frac{1}{2}''$ Face Pinion. The Worm drives a 57-tooth Gear mounted freely on a 1″ Rod fixed in a Bush Wheel, which is bolted to the Double Angle Strip 1. The Gear is supported on the Rod by a Collar. A $\frac{3}{4}''$ Bolt passed through one of the holes in the Gear is fitted with a Collar and two Washers and then its shank is fixed in the boss of a Slide Piece. A $4\frac{1}{2}''$ Strip 4 is passed through the Slide Piece and is lock-nutted to the Angle Girder 3.

A 57-tooth Gear on a Rod 5 is arranged to mesh with the $\frac{1}{2}''$ diameter, $\frac{1}{2}''$ Face Pinion. Rod 5 carries a $\frac{1}{2}''$ Pinion, a Collar, a Coupling 6, a Collar and a second $\frac{1}{2}''$ Pinion. A 1″ Rod in Coupling 6 engages a hole in the Strip 4. (*Cont. on page 305*)

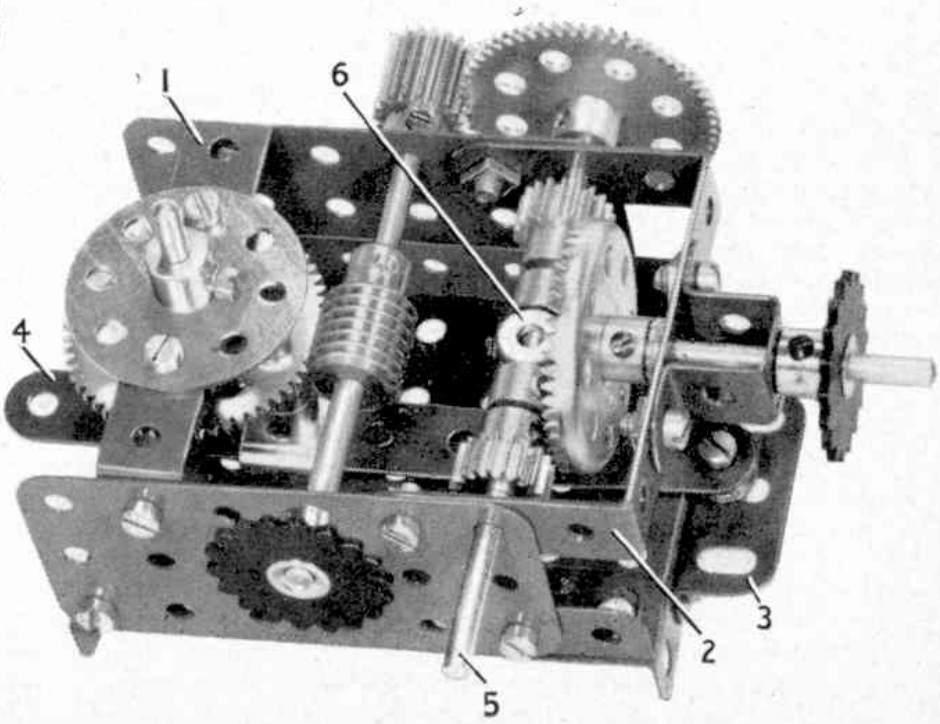

Fig. 2. An automatic reversing mechanism designed by Mr. G. Bowker, Bolton.

A Self-winding Tower Clock

By T. R. Robinson, F.B.H.I.

EVER since the first large tower clocks were made, many centuries ago, the power to drive their wheelwork has been obtained from the slow descent of heavy weights. Even to-day weights still provide the best form of drive for a large clock. At the same time, clock weights of the usual kind are not only cumbersome and dangerous, but also provide a lot of hard work for the clockwinder. Now electric motors are being used to wind such clocks up automatically.

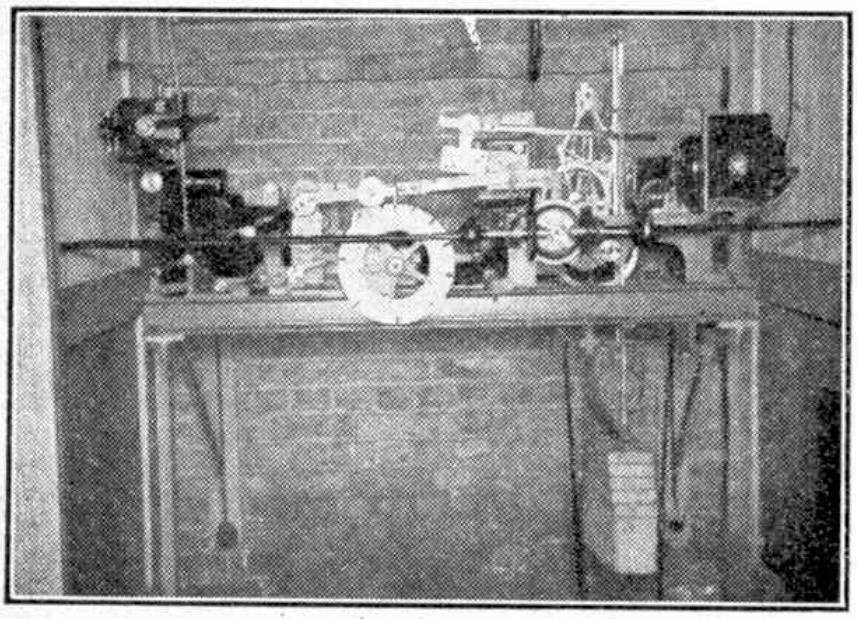

The movement of the War Memorial Clock, All Saint's Church, Tooting, the driving weight of which is wound up automatically by the electric motor seen on the right.

Most modern tower clocks are made on this "self-winding" principle, and an example of particular interest has recently been installed in the tower of All Saints Church, Tooting, London S.W., where it forms the War Memorial of the parish. This has been constructed to operate the hands of two 6 ft. dials, but has sufficient power in reserve to deal with a third dial that is to be added later. It strikes the hours on the large tenor bell of the church. The striking part of the clock is of the direct motor-driven type, and therefore requires no driving weight.

The new clock is of unit construction, and consists of two main portions, the timekeeping and striking mechanisms. The former resembles that of the usual hand-wound clock, and has the normal train of wheels and pinions, except that the large "main-wheel," the barrel on which the weight line is coiled and the winding ratchet assembly are omitted. Instead the driving weight, which is relatively small and light, drives what would usually be the second spindle of the train. This weight is hung on one loop of an endless length of Renold chain that engages with a sprocket attached to the spindle, and also with another sprocket that can be rotated by an electric motor operating through a worm-reduction gear.

The operation of the winding motor switch is controlled by a vertically mounted trip-bar, which slides vertically in guides attached to the clock frame. This bar is attached at its lower end to the sheave of the driving weight sprocket, and so rises and falls with the weight. At set points on the trip-bar are two small rollers, and between them is the end of a lever attached to a rocker actuating the switch. When the going of the clock allows the weight to descend to its lowest normal position the upper roller depresses the rocker-lever and trips the switch, so starting the winding motor. This raises the weight, and with it the trip-bar. After a pre-set interval the lower roller is brought up against the underside of the lever, which is moved upward, switching off the motor at the point where the weight is fully wound. The arrangement of the endless chain allows the winding action to proceed without in any way affecting the going of the timekeeping part of the clock.

The design of the dials and hands was given special care, for the clock can be seen for a considerable distance. The numerals were kept narrow, and the hands were made heavy, but of sharply contrasting form. The result has been particularly successful.

The clock was constructed and erected in the tower by Chas. H. Potts, Leeds, and the consulting architect was Leslie T. Moore, F.R.I.B.A. Since it was set going, it has proved itself very accurate.

Among the Model-Builders

By "Spanner"

A Gear Drive Roller Bearing

One of the problems in the design of large roller bearing units for model cranes is to provide a neat and positive drive to operate the slewing movement of the model. Mr. C. Cohen, a keen model-builder who lives in Cape Town, S.A., wrote recently and sent details of a novel arrangement, built entirely with standard parts, that solves the problem very effectively. I have built up a roller bearing unit incorporating the driving arrangement designed by Mr. Cohen, and the mechanism is illustrated in Figs. 1 and 3.

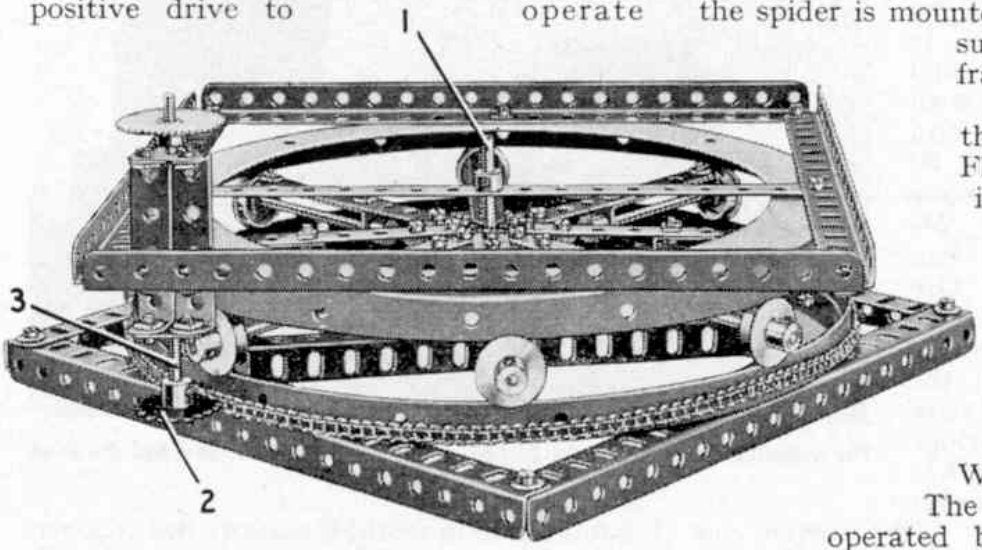

Fig. 1. A built up roller bearing unit in which provision is made for operating the slewing movement of a model crane. It was designed by Mr. C. Cohen, Cape Town, South Africa.

The lower member of the bearing is a Flanged Ring bolted firmly to a solid framework of Angle Girders. A length of Sprocket Chain is placed round the rim of the Flanged Ring and its ends are joined together so that it fits tightly in place.

The "spider" carrying the rollers is shown separately in Fig. 3. Eight $4\frac{1}{2}''$ Strips are bolted radially to a Face Plate, and each Strip is fitted with a $2\frac{1}{2}'' \times \frac{1}{2}''$ Double Angle Strip. The Double Angle Strips support $3\frac{1}{2}''$ Rods, each of which carries a $\frac{3}{4}''$ Flanged Wheel and is held in place by a Collar. The Flanged Wheels are arranged to run on the upper edge of the Flanged Ring, and the spider is mounted on a vertical Rod 1 supported in the base frame.

The upper member of the bearing is a second Flanged Ring, and this is bolted to the superstructure to be rotated. A $9\frac{1}{2}''$ Strip bolted across the Flanged Ring is passed over the Rod 1 and the Flanged Ring rests on the $\frac{3}{4}''$ Flanged Wheels.

The slewing mechanism is operated by a Sprocket Wheel that engages the links of the Sprocket Chain passed round the lower Flanged Ring. In the example illustrated, a 1" Sprocket 2 is fixed on a Rod 3, which is mounted in 1" Triangular Plates. The Triangular Plates are fixed to the lugs of two Double Brackets and two $1\frac{1}{2}'' \times \frac{1}{2}''$ Double Angle Strips bolted to one of the Girders of the superstructure.

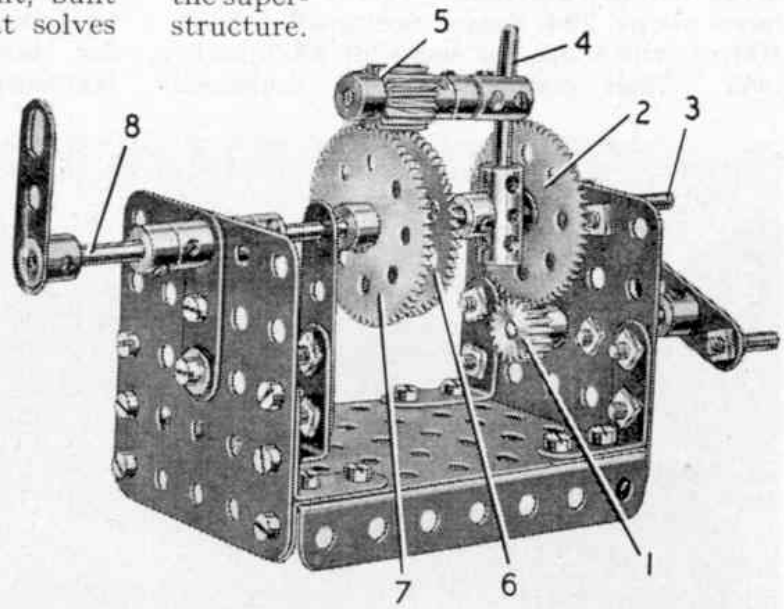

Fig. 2. A compact form of epicyclic gearing giving a total reduction ratio of 60:1. It is specially suitable for use in Meccano clocks.

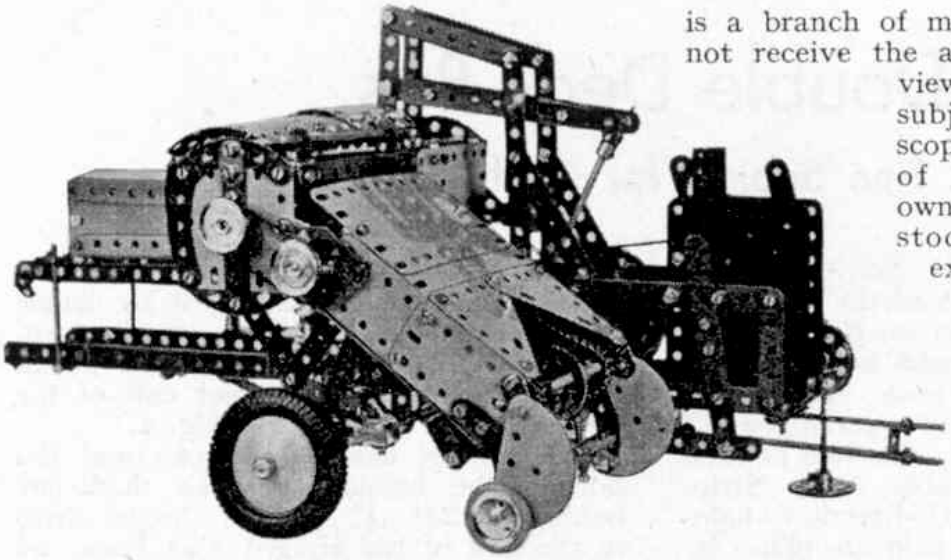

This agricultural pick-up baler is an example of model-building by 10-years old John Gartell, Yenston, Somerset.

60:1 Reduction Ratio

The mechanism shown in Fig. 2 is a form of epicyclic gearing, and in conjunction with a 3:1 reduction ratio the epicyclic mechanism provides an overall ratio of 60:1 in a small space. The arrangement is of particular value in model clocks, as it enables a compact drive of the correct ratio to be fitted between the minute and a seconds hand.

A ½″ Pinion 1 on the input shaft drives a 57-tooth Gear 2, which is loosely mounted on a Rod 3 fixed in a Double Arm Crank bolted to the framework. A Coupling is attached by an Angle Bracket to the Gear 2, and supports a 1½″ Rod 4 that carries a Short Coupling. Another 1½″ Rod is fixed in the Short Coupling and on it a ½″ diameter, ½″ face Pinion 5 is mounted freely between Collars.

A 57-tooth Gear 6 is fixed on Rod 3, which extends partly into the boss of a 60-tooth Gear 7 fixed on the output shaft 8. The Rod 4 is arranged at a slight angle, so that Pinion 5 meshes accurately with the Gears 6 and 7.

A Model Pick-up Baler

I have on many occasions in the past illustrated models of various kinds of agricultural machines, as I feel that this is a branch of model-building that does not receive the attention it deserves in view of the many attractive subjects it covers and the scope there is in this kind of model-building for owners of only moderate stocks of Meccano. An excellent example of this came to my notice recently in the shape of a pick-up baler, built from a No. 8 Outfit and a few extra parts, by John Gartell, Yenston, Somerset.

The model is shown in the upper illustration on this page. John is only 10 years of age, but as he lives on a farm, naturally he has special interest in agricultural machinery, and possibly first-hand experience of it. At any rate, he seems to be quite familiar with the details of these machines, and his attempt to reproduce a Massey Harris 701 type Pick-up Baler reflects considerable credit on his model-building ability.

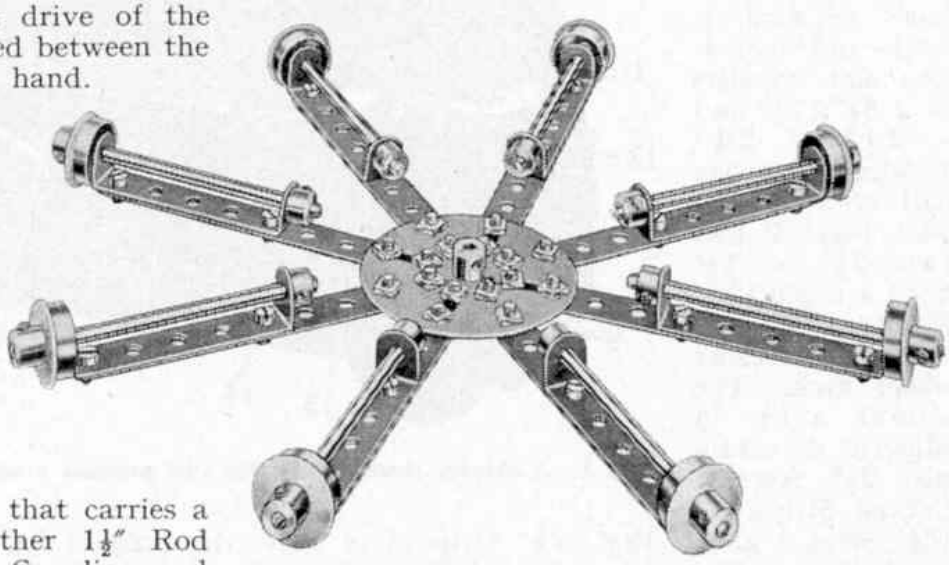

Fig. 3. The "spider" of the roller bearing unit shown in Fig. 1 on the opposite page.

A Novel Use for the Rod with Keyway

A novel use for the new Meccano Rod with Keyway (Part No. 230) has been suggested by Mr. J. Williams, Haverfordwest. He has utilised the slotted keyway of the part as a means of passing a feed wire through the centre of a roller bearing to carry electric current to a motor mounted on a rotating superstructure supported by the bearing.

Among the Model-Builders

By "Spanner"

Epicyclic Transmission Gear

The device shown in Fig. 1 is an interesting mechanism designed to provide a gear ratio of two to one between two shafts. Its chief merits lie in the compactness of its construction and in the fact that the driving and driven shafts can be mounted in direct line with each other.

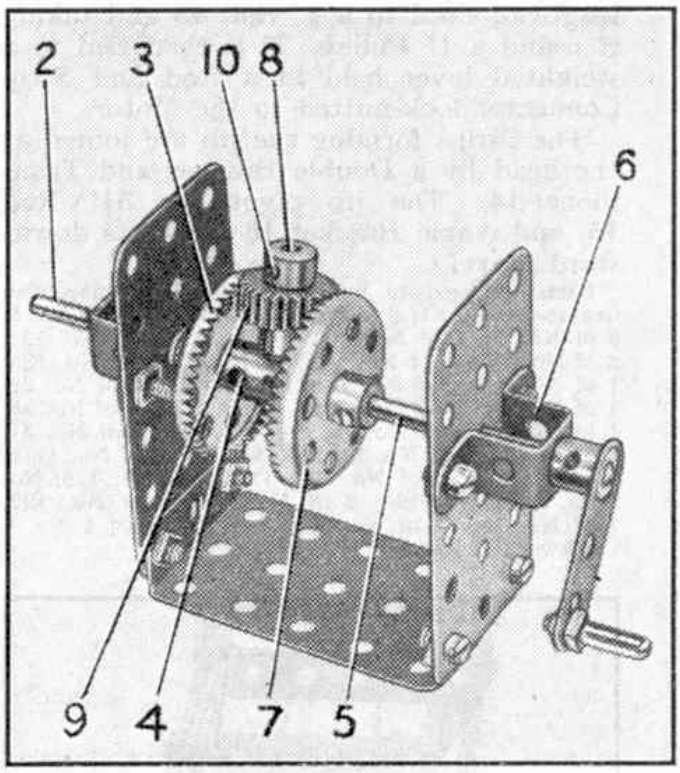

Fig. 1. Compact epicyclic transmission gearing.

The handle is secured to a Rod 5 mounted in reinforced bearings 6. A second Rod 2 is free to rotate in the boss of a 1½″ Contrate Wheel 3, and is secured in one end of the Coupling 4. Rod 5 runs freely in the other end of the Coupling and carries a 1½″ Contrate Wheel 7 fixed in the position shown.

A 1½″ Rod 8, gripped in the central transverse hole of the Coupling 4, carries a ¾″ Pinion 9, which is free to rotate about the Rod, but is retained in position by a Collar 10. The Pinion is engaged by the teeth of the Contrate Wheels 3 and 7. The Double Bent Strip forming the bearings for the driven Rod is bolted to the Plate by two ½″ Bolts, the shanks of which enter holes in the Contrate Wheel 3 and so prevent it from rotating.

How to Use Meccano Parts

Toothed Segment (Part No. 129)

The Meccano Toothed Segment is intended principally for use where it is required to rotate a mechanism through only part of a complete revolution, as in the device seen in Fig. 2. To use the Segment it is bolted to a Face Plate or similar part capable of rotating about a centre, and a 1″ Gear Wheel is engaged with its teeth. The Segment has 28 teeth and a radius of 1½″, so that four Segments can be placed together to form a circle, as shown in Fig. 2. The circle measures 3″ in diameter and has 112 teeth. Care should be taken, when joining the segments together, to see that the adjoining teeth are spaced correctly, otherwise they will fail to mesh properly with the driving Gear.

An application for a Toothed Segment is illustrated in Fig. 3, where it is used as a ratchet for a hand brake lever. The Toothed Segment is fixed to the model by means of a Trunnion in the bottom hole of which a Rod is journalled. The other

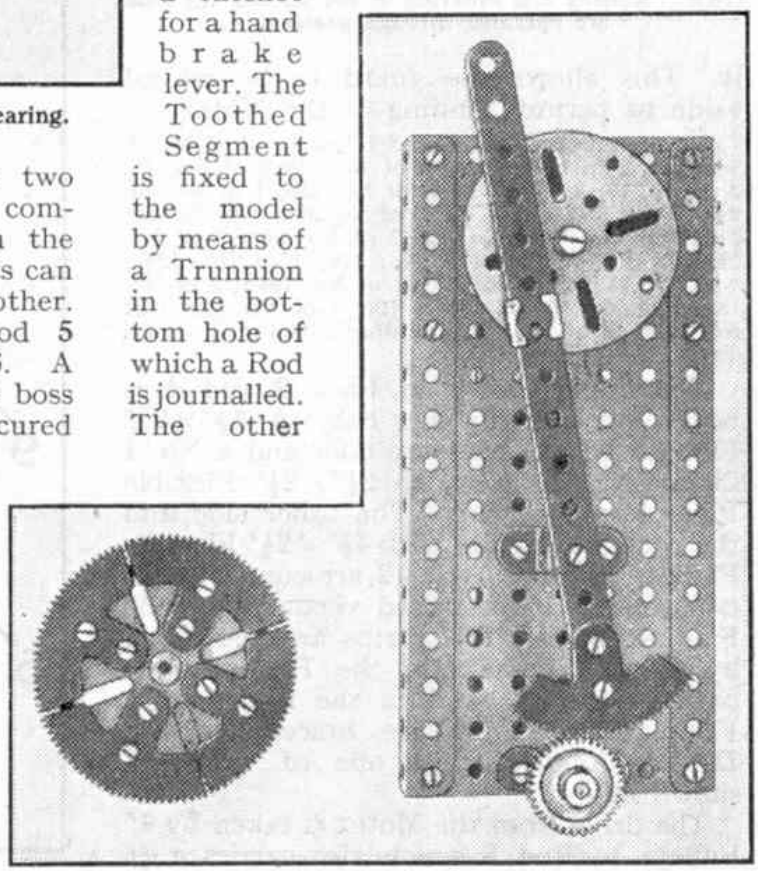

Fig. 2. A Meccano Toothed Segment used to rotate a shaft through part of a revolution.

end of this Rod is carried in a suitable bearing bolted to a convenient part of the model.

A Useful Ratchet Brake or Gear Control Lever

The device shown in Fig. 3 is designed to provide a positive method of retaining brake or gear control levers in any required position, and it can be adapted to many models such as cranes and motor vehicles.

It consists of a Toothed Segment 1 bolted to a Trunnion fixed to a baseplate. A Rod 2 passes through this Trunnion, through the end hole of a Strip 3 and through a second Trunnion 4. The Strip 3 forms the control lever. Mounted freely on the Strip is a Slide Piece 5, in the boss of which is fixed a Rod 6. The Rod passes also through a Collar 7 fixed to the Strip but spaced from it by a Washer. A Coupling 8 fixed to the Rod holds a Centre Fork 9. Between the Coupling and the Collar 7 are a Compression Spring 10 and a few Washers. Normally the prongs of the Centre Fork are pressed in contact with the teeth of the Toothed Segment by the action of Spring 10, so that the Strip forming the lever is held in position; but they can be withdrawn by pulling the Rod 6 upward slightly and the lever is then freely movable.

Connection between the control lever and the gear-box or brake gear can be made by means of a Rod fixed in a Hand-rail Support 11 freely lock-nutted to the Strip 3.

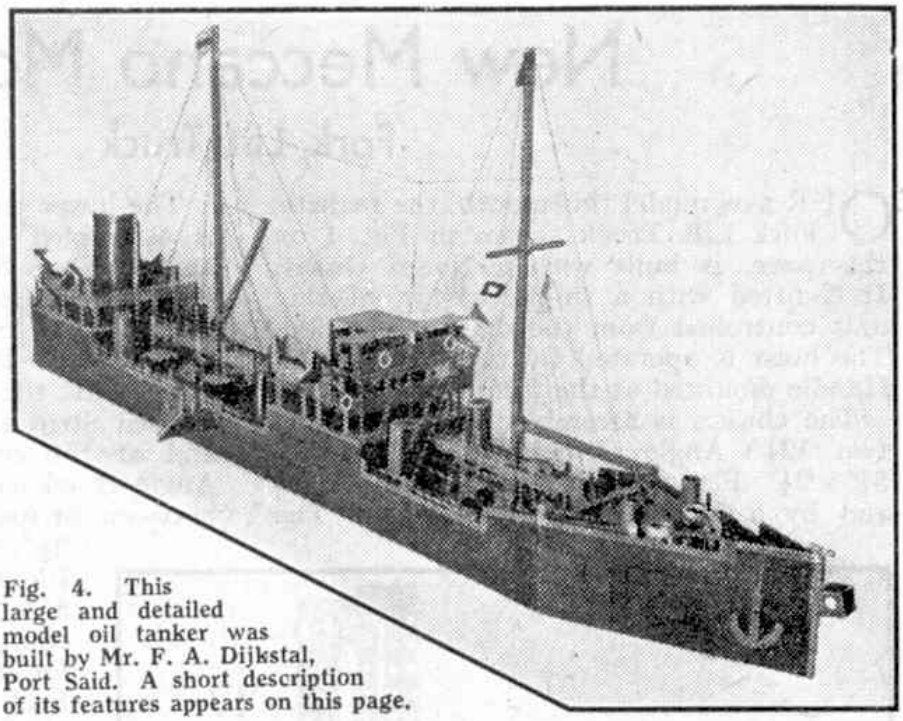

Fig. 4. This large and detailed model oil tanker was built by Mr. F. A. Dijkstal, Port Said. A short description of its features appears on this page.

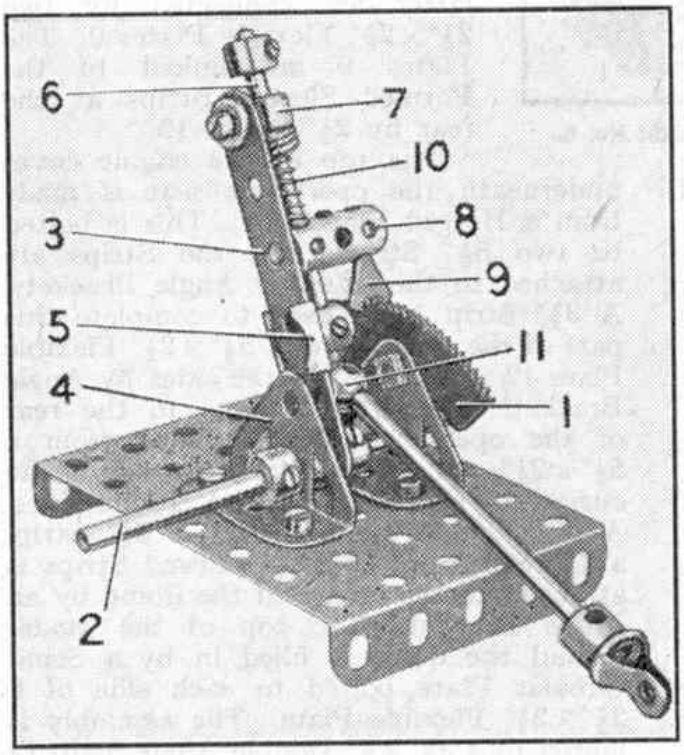

Fig. 3. A novel ratchet brake or gear control lever.

Egyptian Reader's Model Oil Tanker

From Port Said comes news of an Egyptian reader, Mr. F. A. Dijkstal, who has been busy building the large model oil tanker shown in Fig. 4 on this page. A striking feature of the model is the great amount of detail it incorporates, among the numerous fittings being a steering wheel and compass on the bridge, oil pipes along the decks, navigation lights, anchors, and deck cranes. Many other items of interest also are included and most of them are shown in the illustration. The square box that can be seen at the front of the vessel represents a very powerful search-light of the kind used by ships when voyaging through the Suez Canal by night. Another feature of the model, and one often overlooked by model ship builders, is the inclusion of flags and signals made out in the correct markings.

This model was displayed in the shop window of a Meccano dealer in Port Said, and it attracted considerable attention.

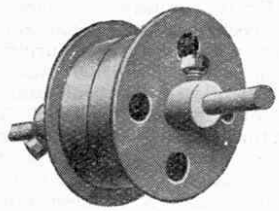

Meccano Belt Pulley, constructed from two Flanged Wheels

Suggestions Section

Edited by "Spanner"

(68)—Meccano Railway Points

(N. S. W. and J. Wheatley, Claygate)

IT is a comparatively simple matter to build a straight length of Meccano track on which to run locomotives and other models, such as travelling cranes or gantries, but it is not always easy to construct from the existing parts switch rails and curves with which to complete the "permanent way." Nevertheless we are able to illustrate an interesting Meccano model of railway points built by the two readers mentioned above. This model is designed to conform with the standard "0" gauge, and is so well constructed that it has been found possible to incorporate it in a Hornby Railway with great success.

The construction of the points is quite simple, as will be seen from the photograph, but much care must be taken in adjusting the various pieces so that they shall present a smooth surface to the vehicles that run over them, and at the same time conform throughout to the stipulated gauge of $1\frac{1}{4}''$.

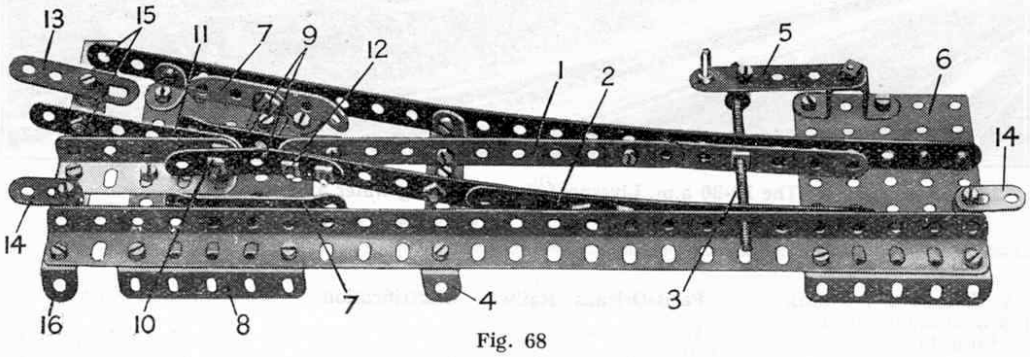

Fig. 68

The movable tongue 1 consists of a $5\frac{1}{2}''$ and a $3\frac{1}{2}''$ Strip overlapped two holes, whilst the corresponding piece 2 is built up from a $5\frac{1}{2}''$ Strip and a $5\frac{1}{2}''$ Slotted Strip overlapped about $2\frac{1}{2}''$. These latter Strips are held together by two bolts passing through the $5\frac{1}{2}''$ Strip and engaging one of the slots in the Slotted Strip. The tongues 1 and 2 are secured to the Threaded Rod 3 by means of nuts screwed tightly against each side of the Strips, and are bolted near their other ends to Angle Brackets that, in turn, are bolted to the $2\frac{1}{2}'' \times \frac{1}{2}''$ Double Angle Strip 4.

Operating the Meccano Points

Although the strips 1 and 2 are thus rigidly secured to the Angle Strip 4, their longer arms are of sufficient flexibility to allow for a movement from side to side of the track. This movement is effected by the operation of the hand lever 5, which consists of a Threaded Pin and a $2\frac{1}{2}''$ Strip pivotally attached to a Double Bent Strip bolted to the base plate 6.

The outer check rails 7 consist of $2\frac{1}{2}''$ Strips slightly bent as shown and bolted by means of Angle Brackets to the Plate 8. The guide pieces 9 are bolted to the inner ends of the tongues 1 and 2, and are further secured by means of a $\frac{3}{4}''$ Bolt 10, the necessary spacing being obtained by means of two nuts placed on either side of the triangular piece 11. It should be noted that the bolt 12 is $\frac{1}{2}''$ in length and serves to secure the two $2\frac{1}{2}''$ Strips 9 to the rails 1 and 2.

The 2" Slotted Strip 13 and the Flat Brackets 14 may be used as a means of connection between the Meccano points and Hornby Rails.

The Strips 15, which form the curved portion of the points, are bolted by means of Angle Brackets to the $5\frac{1}{2}'' \times \frac{1}{2}''$ Double Angle Strip 16 and the base Plate 8. The Brackets should be mounted in every case so that their elongated holes are bolted to the base portions of the rail, as this permits small adjustments to be made if necessary when testing the points.

Our contributors state that they have been able to run Hornby Trains over the points at full speed without any derailments. The chief merit of the model, in our opinion, lies in the fact that the points may be built to any desired gauge, and may therefore be incorporated in the "runways" of many different types of Meccano models, ranging from small trucks to heavy locomotives or travelling gantries.

(69)—Magnetic Screwdrivers

(J. R. Cottrill, St. Annes-on-Sea)

A magnetic screwdriver is most useful for picking up grub-screws, etc., and inserting them in awkward positions in a model. Any steel screwdriver can be magnetised, but unless it consists of specially hard metal its powers of attraction diminish quickly.

The Meccano long screwdriver (Part No. 36a) can be magnetised by stroking it several times from end to end of the metal blade with a good strong horseshoe or bar magnet. It is immaterial which pole of the magnet is used first, providing the screwdriver is stroked always in the same direction with that pole; it may be stroked with the other pole in the *opposite* direction. If necessary the blade can be hardened beforehand by heating it to blood-red hue and plunging into cold water. After magnetising the tip should be again held in a flame until it turns blue; this softens the steel slightly and prevents it from crumbling owing to excessive hardness.

(70)—Epicyclic Transmission Gear

(E. Armitage, Garston, Liverpool)

The arrangement shown in Fig. 70 is designed to provide a gear ratio of two in one between any two shafts. Its chief merits lie in the compactness of its construction and in the fact that the driving and driven shafts may be mounted in direct line with one another.

The handle 1, consisting of a Threaded Pin bolted to the end of a Crank, is secured to a 2″ Axle Rod journalled in the reinforced bearings 2. This 2″ Rod is free to rotate in the boss of a 1½″ Contrate Wheel 3, but is secured in one end of the Coupling 4. A further Axle Rod 5, which is secured in the other end of the Coupling 4 and journalled in further reinforced bearings 6, carries the 1½″ Contrate Wheel 7 fixed in the position shown.

A 1½″ Rod 8 gripped in the central transverse hole of the Coupling 4 carries a ¾″ Pinion 9, which is free to rotate about the Rod but is retained in position by a Collar and set-screw 10. The Pinion is engaged by the teeth of both Contrate Wheels 3 and 7.

The Double Bent Strip forming the bearing 2 for the driving Rod is bolted to the side plate by means of two ½″ Bolts, the shanks of which enter holes in the face of the Contrate Wheel 3 and so prevent the latter from rotating.

On operation of the handle 1, the Pinion 9 travels round the teeth of the fixed Contrate Wheel 3 and is caused thereby to turn rapidly about its own axle. The rotation of the Pinion is transmitted to the Contrate Wheel 7 on the shaft 5, and it will be found that this secondary shaft 5 rotates twice as fast as the driving Rod carrying the handle 1. Alternatively, by using the Rod 5 as the driving shaft, a one in two reduction gear will be obtained, for the 2″ Rod will revolve once only to every two revolutions of the Rod 5.

If desired, the device can be repeated several times in a straight line, when a great difference in speed will be obtained between the primary shaft and the final driven Rod, whilst the space occupied by the intermediate gearing is reduced to a minimum.

A similar type of speed acceleration or reduction gear was described in the "Suggestions Section" in the "*M.M.*" for May 1926, under "Sun and Planet Mechanism" and "Sun and Planet Winding Gear" (see Suggestions Nos. 38 and 39 respectively).

Various forms of epicyclic gearing are used in actual practice where lack of space or other considerations make this type of drive transmission preferable to ordinary spur gearing, which requires parallel shafting.

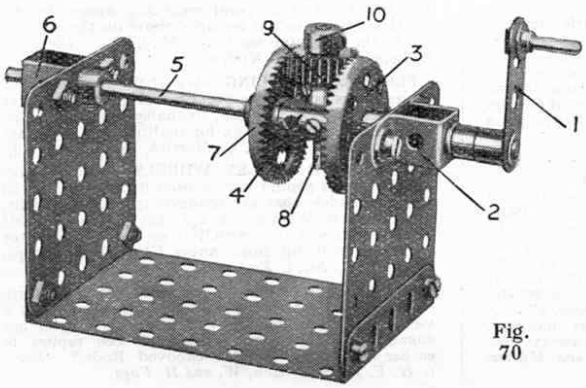

Fig. 70

(71)—Reversing and Drive-Changing Gear

(H. A. A. and R. M. A. Hankey, Limpsfield)

The mechanism shown in Fig. 71 enables two or three different operations to be controlled from a single driving shaft separately or simultaneously and in forward or reverse direction. It is of compact construction, simple to control and reliable

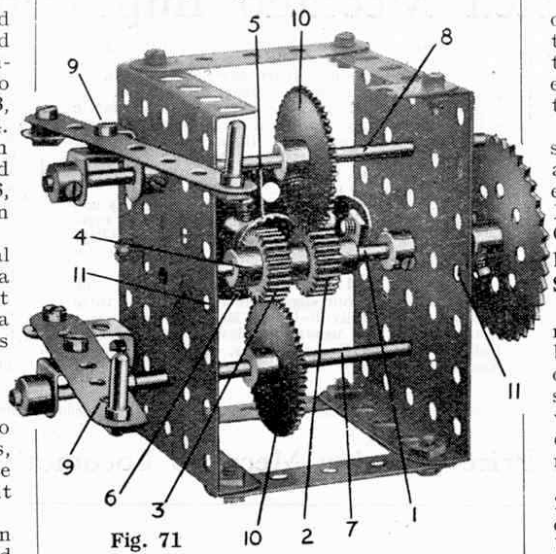

Fig. 71

in action. The advantages that it offers when fitted to a crane or similar model are apparent.

The Rod 1, which takes the drive from the Motor, carries a ¾″ Pinion 2 secured in the position shown. A similar Pinion 3 is free to rotate on the Rod but is retained in position by a Collar and set-screw 4. The Pinions engage with opposite sides of a ¾″ Contrate Wheel 5 and the latter is free to turn on a short Rod secured in the boss of a Bush Wheel 6. This wheel is bolted rigidly to the 2½″ × ½″ Double Angle Strip that connects the side Plates of the gear box.

It will be apparent that the Pinions 2 and 3 must rotate in opposite directions, for the former drives the Contrate Wheel 5 while the latter is *driven by* that wheel.

The secondary Rods 7 and 8 are slidable in their bearings and their movements may be controlled by suitable levers 9. Each Rod carries a 50-teeth Gear Wheel 10, and on operation of its respective lever this Gear Wheel may be caused to engage with one or other of the Pinions 2 or 3, or it may be placed in neutral, i.e. in a central position between the Pinions.

A third shaft can be journalled in the holes 11 of the side Plates and controlled from the driving shaft 1 in exactly the same way. The gear box, therefore, enables the shafts 7 and 8 and the imaginary shaft journalled in the holes 11 to be driven simultaneously or separately from the single driving Rod 1. Moreover any one of the three secondary shafts can be reversed or thrown out of gear without affecting the operation of the remaining two or altering the direction of rotation of the Rod 1.

(72)—Automatic Brake

(S. May, Elmers End, Beckenham)

This simple but ingenious device is particularly adaptable to Meccano motor cars and other models that are propelled by means of the Clockwork Motor. It provides a form of automatic brake that is brought into action immediately the model is lifted from the table or floor.

The road wheels 1 (Fig. 72) are mounted on a Crankshaft 2, which is driven from the Clockwork Motor. It will be observed that the Crankshaft is journalled in the elongated holes of Flat Brackets secured to the sides of the base Plate 3.

A 2″ Axle Rod 4 is gripped by the set-screw of a Crank 5 bolted to the base Plate, and a Coupling 6 mounted on the lower end of this Rod carries the horizontal 2″ Rod 7. To the outer end of the Rod 7 a Coupling 8 is secured in the vertical position shown.

Stopping the Clockwork Motor

So long as the weight of the vehicle rests on the Crankshaft 2, the latter will be forced to the top of the elongated holes of the Flat Brackets. The Rod 4 should be so adjusted that, in this position of the wheels, the Coupling 8 just clears the bent centre portion of the Crankshaft and the road wheels 1 are therefore free to rotate.

If the model is lifted, however, the shaft 2 and wheels 1 will fall by reason of their own weight to the bottom of the slotted bearings. In this position the centre of the crankshaft strikes the Coupling 8, so preventing the wheels from rotating and consequently stopping the Clockwork Motor.

The axle 2 should be coupled to the Motor by means of a Sprocket Chain drive, and the chain should be of just sufficient slackness to permit the vertically-sliding movement of the axle. If gear wheels are used for the drive transmission, the axle 2 is liable to become disengaged when freed of the weight of the vehicle, with the result that the braking device loses its effect and the Motor is free to "race" independently of the road wheels.

This Month's Awards

N. S. W. and J. Wheatley will be jointly awarded with a cheque to the value of ten shillings and sixpence for Suggestion No. 68, while H. A. A. and R. M. A. Hankey will together receive cash to the value of seven shillings and sixpence for No. 71.

E. Armitage and S. May will be presented with five shillings each for Suggestions 70 and 72 respectively, and J. Cottrill will receive a special Certificate of Merit and a complimentary copy of "Meccano Standard Mechanisms" for Suggestion No. 69.

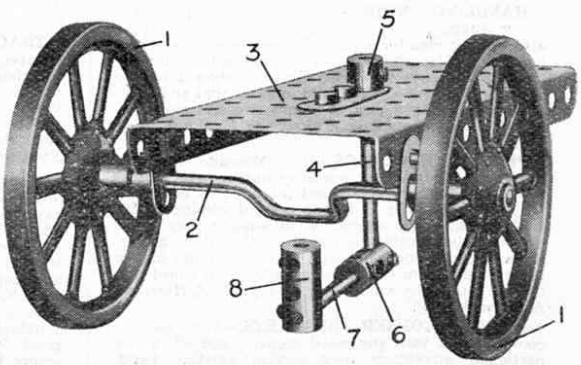

Fig. 72