Among the Model-Builders

By "Spanner"

A Simple Reversing Mechanism

Fig. 1 illustrates another of the many interesting mechanisms designed by Mr. H. H. Taylor, Huddersfield, quite a lot of whose work has been included in past issues of the Magazine.

This time it is a simple reversing mechanism that has many applications. To construct it join two $3\frac{1}{2}'' \times 2\frac{1}{2}''$ Flanged Plates 1 and 2 together, using a $2\frac{1}{2}'' \times 2\frac{1}{2}''$ Flat Plate 3 and two $2\frac{1}{2}'' \times \frac{1}{2}''$ Double Angle Strips. A Washer should be placed between the lugs of the Double Angle Strips and the Flanged Plates. Then bolt two 1″ Triangular Plates 4 to the Flanged Plates by means of $\frac{1}{2}''$ Bolts with Collars on their shanks. To a Crank 5 a 2″ Slotted Strip 6 and a $3\frac{1}{2}''$ Strip 7 are bolted. On a $2\frac{1}{2}''$ Rod mount a 2″ Pulley Wheel and a 1″ Gear Wheel 8, and loosely the Crank 5. The Rod is journalled in the 1″ Triangular Plates 4. A $\frac{1}{2}''$ Pinion 9, mounted on a $\frac{3}{4}''$ Bolt, is fixed in the 2″ Slotted Strip so as to mesh with the 1″ Gear Wheel 8.

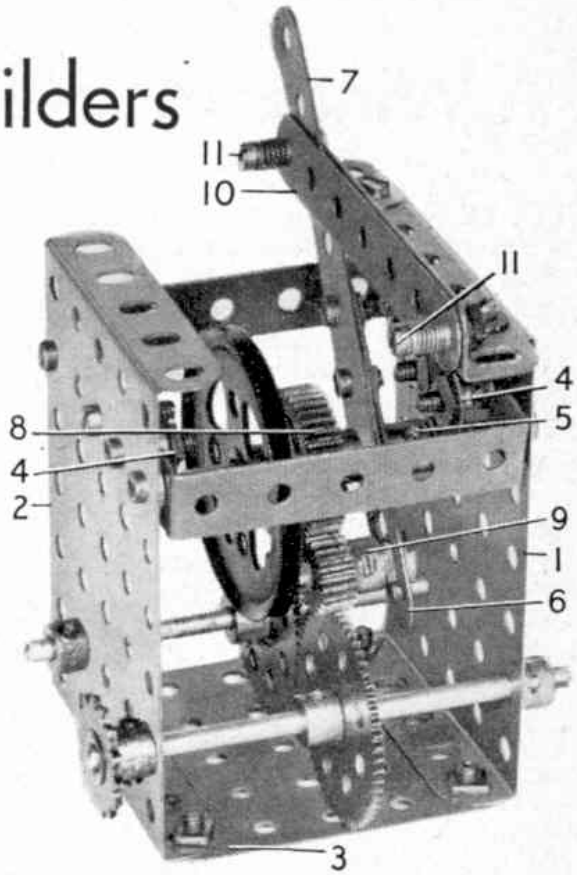

Fig. 1. A simple form of drive reversing mechanism designed by H. H. Taylor, Huddersfield.

Two $3\frac{1}{2}''$ Rods, each of which carries a 57-tooth Gear Wheel, are mounted between the two Plates 1 and 2, and the Gears are meshed with each other. The Rods are held in position by Collars and a $\frac{3}{4}''$ Sprocket Wheel. Bolt a $3\frac{1}{2}''$ Angle Girder to the top flange of the Flanged Plate 1. A $3\frac{1}{2}''$ Strip 10 is spring loaded with Compression Springs on the $\frac{3}{4}''$ Bolts 11, which are lock-nutted. This Strip 10 holds in place a lever consisting of a $3\frac{1}{2}''$ Strip 7, and by moving the lever to and fro, forward, neutral, and reverse drive positions can be obtained.

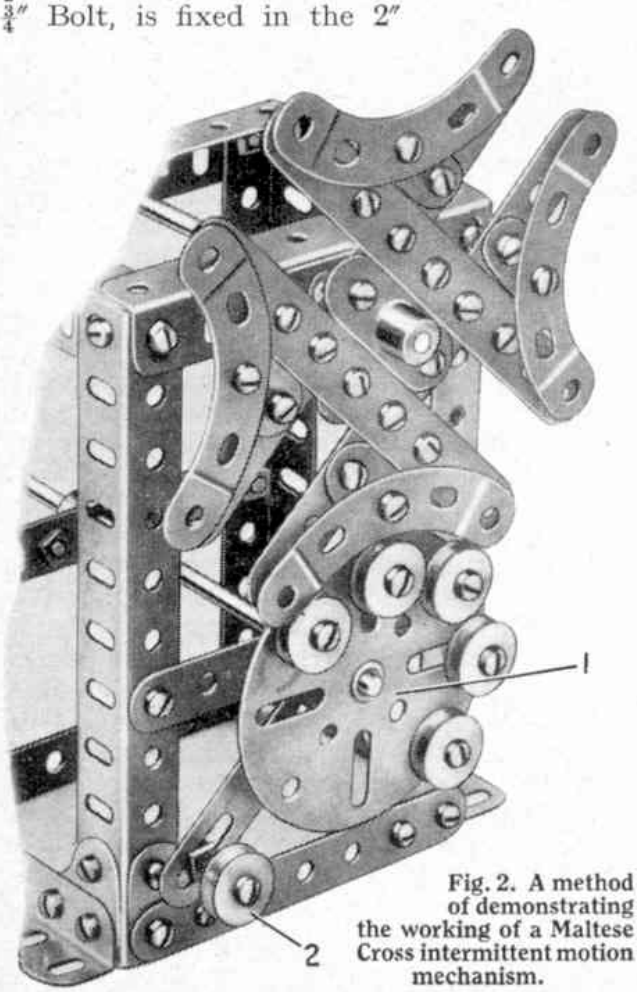

Fig. 2. A method of demonstrating the working of a Maltese Cross intermittent motion mechanism.

Large Maltese Cross Mechanism

This intermittent drive mechanism is suitable only for comparatively slow speeds, but it is an interesting one to assemble and to observe in operation. The framework in this instance is built up from $5\frac{1}{2}''$ and $3\frac{1}{2}''$ Angle Girders braced by means of 1″ Corner Brackets, but it will of course be dispensed with when the mechanism is incorporated in a model.

The driving member is a Face Plate 1, which is mounted on a short Rod and fitted with five $\frac{1}{2}''$ loose Pulleys held in place by means of $\frac{3}{8}''$ Bolts. At the back