A NEW MECCANO MODEL

Model No. 734. Ship-Coaler

ONE of the most interesting features about a great port is the abundant provision made for coaling the never-ceasing stream of steamships that range in size from a small tug to a large passenger liner.

300 Tons per Hour

The method employed for transferring the coal from the quayside to the ship's bunkers varies according to local conditions and circumstances. At Liverpool, for instance, Messrs. Rea Ltd. have a fleet of floating coaling machines operated by grab in conjunction with belt conveyor and also by bucket elevator and chutes. The grab machines do not themselves carry any coal but are moored alongside the vessel to be coaled, and barges containing the coal are brought alongside the grab machines. The grab is lowered into the barge, from which it takes up in its great steel jaws a mouthful of coal weighing something over a ton. This coal is raised to any height required and is then released on to a travelling belt conveyor by which it is carried across the deck of the vessel to the hatchways. While the coal is on its journey along the conveyor the grab descends again and takes up another load, and so the process goes on, the loading proceeding at the rate of over 100 tons per hour. As soon as one barge is emptied another takes its place, so that the loading continues without interruption.

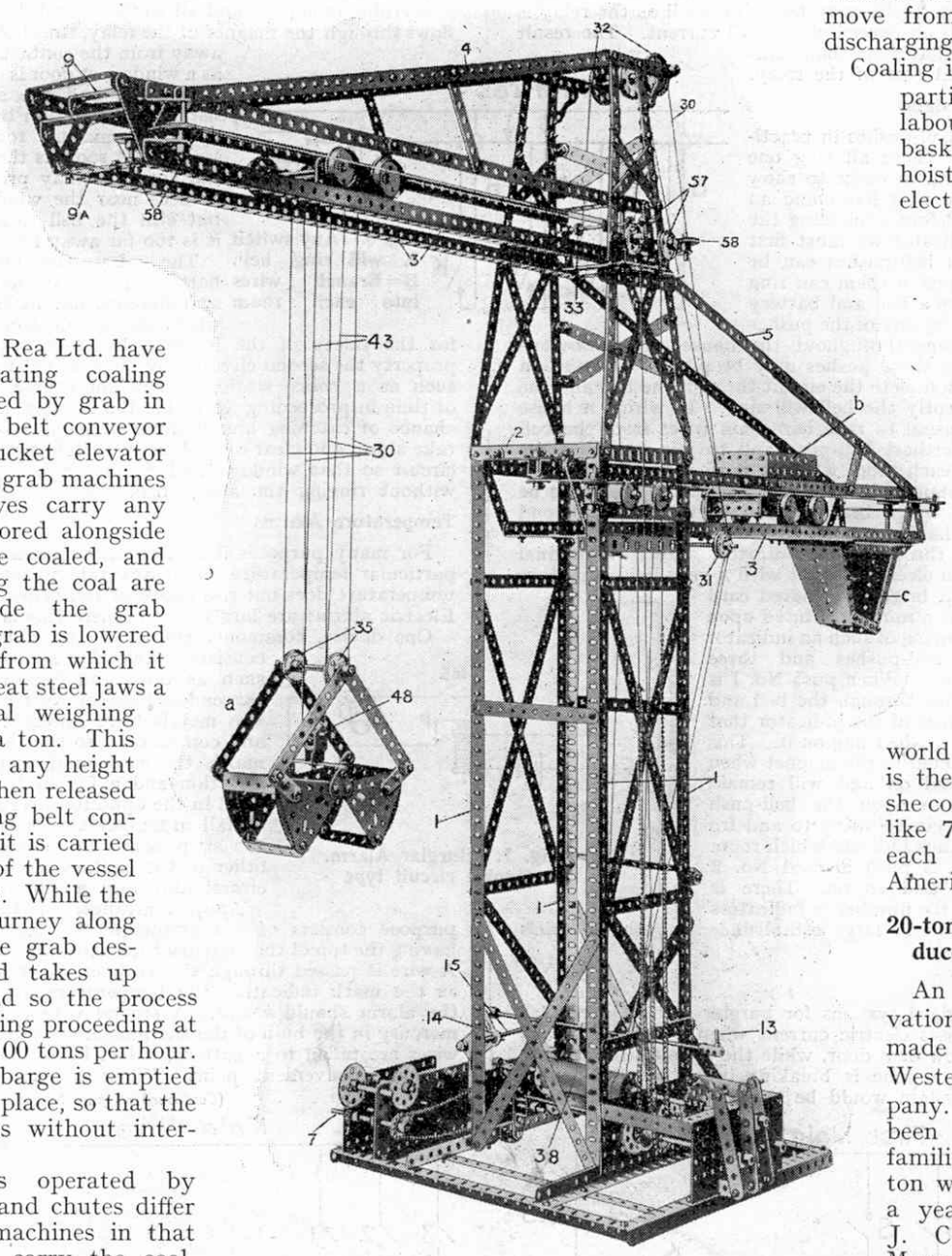

The machines operated by bucket elevator and chutes differ from the grab machines in that they themselves carry the coal. They are capable of holding from 1,000 to 1,100 tons. The coal falls in regulated quantities through a false bottom on to a travelling chain of buckets, which lift it to the top of the machine and discharge it down chutes directed either over the decks into hatchways or into side ports. By means of elevator machines coaling can be carried out at the rate of 300 tons per hour, and the coal can be delivered overall to a height of more than 50 ft., thus ensuring the speedy coaling of a large liner without the vessel having to move from her loading or discharging berth.

Coaling is also carried out partially by hand labour from barges, baskets of coal being hoisted by steam or electric winch barges alongside, or by stationary winches on the quayside.

By these various means vessels such as the White Star Liner "*Baltic*" have received 4,000 tons in one day.

To-day the largest and fastest liners burn oil fuel. The largest passenger liner in the world now burning coal is the "*Adriatic*," and she consumes something like 7,000 tons during each of her trips to America and back.

20-ton Wagons Introduced

An interesting innovation has recently been made by the Great Western Railway Company. Hitherto coal has been carried in the familiar 10-ton or 12-ton wagons, but about a year ago Sir Felix J. C. Pole, General Manager of the G.W.R., addressed a letter to the South Wales coal traders in which he urged strongly the advantages to be gained by the introduction of 20-ton wagons. He pointed out that the cost of building two 10-ton wagons was about 50 per cent. more than the cost of building one 20-ton wagon,

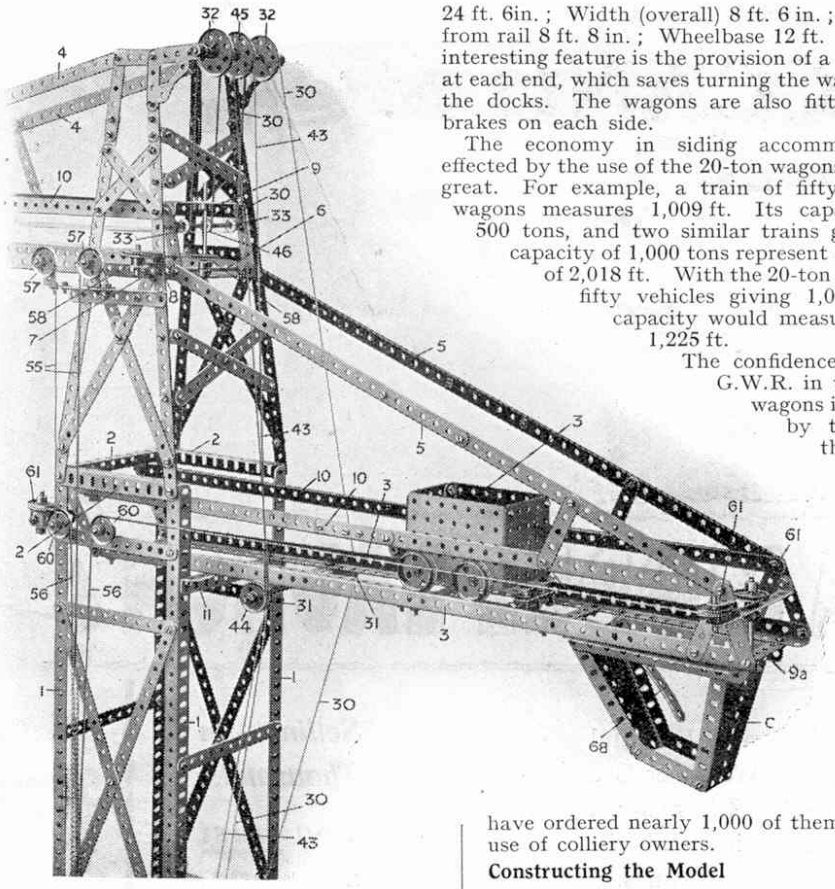

and that the introduction of the larger wagons would effect a considerable saving in the annual cost of wagon renewals. In addition to this, the necessity for the provision of more siding accommodation on the railway and at the collieries would be largely obviated. The first train of 20-ton wagons, 50 in number, reached South Wales in August last, and on the 27th of that month the first demonstration of their value was given at the Port Talbot docks, when several of the new wagons were tipped into an Italian steamship that was taking in a cargo of coal destined for Naples. Our illustration on page 419 is of special interest as it shows the first wagon being tipped on this occasion. All the loads were tipped without the slightest hitch and the demonstration was a complete success. During the next few weeks some 20 trains of the new wagons are expected to arrive in the South Wales coalfield.

Advantages of Larger Wagons

The dimensions of the 20-ton wagons are: — Length 24 ft. 6in.; Width (overall) 8 ft. 6 in.; Height from rail 8 ft. 8 in.; Wheelbase 12 ft. A very interesting feature is the provision of a tip door at each end, which saves turning the wagons at the docks. The wagons are also fitted with brakes on each side.

The economy in siding accommodation effected by the use of the 20-ton wagons is very great. For example, a train of fifty 10-ton wagons measures 1,009 ft. Its capacity is 500 tons, and two similar trains giving a capacity of 1,000 tons represent a length of 2,018 ft. With the 20-ton wagons, fifty vehicles giving 1,000 tons capacity would measure only 1,225 ft.

The confidence of the G.W.R. in the new wagons is shown by the fact that they have ordered nearly 1,000 of them for the use of colliery owners.

Constructing the Model

Having learned something of ship-coalers in general, let us now turn to the splendid Meccano model illustrated on these pages. To construct this model we commence by building the main tower, which consists of four 24½″ vertical Angle Girders (1) braced at the top by three 5½″ Angle Girders (2).

The runways for the grab and truck are formed of 24½″ Angle Girders (3) upon the upper edges of which run the travelling wheels. The outer ends of the grab runway Angle Girders (3) are braced to the tower by two 12½″ Strips (4), overlapped

(*Continued on page* 419)

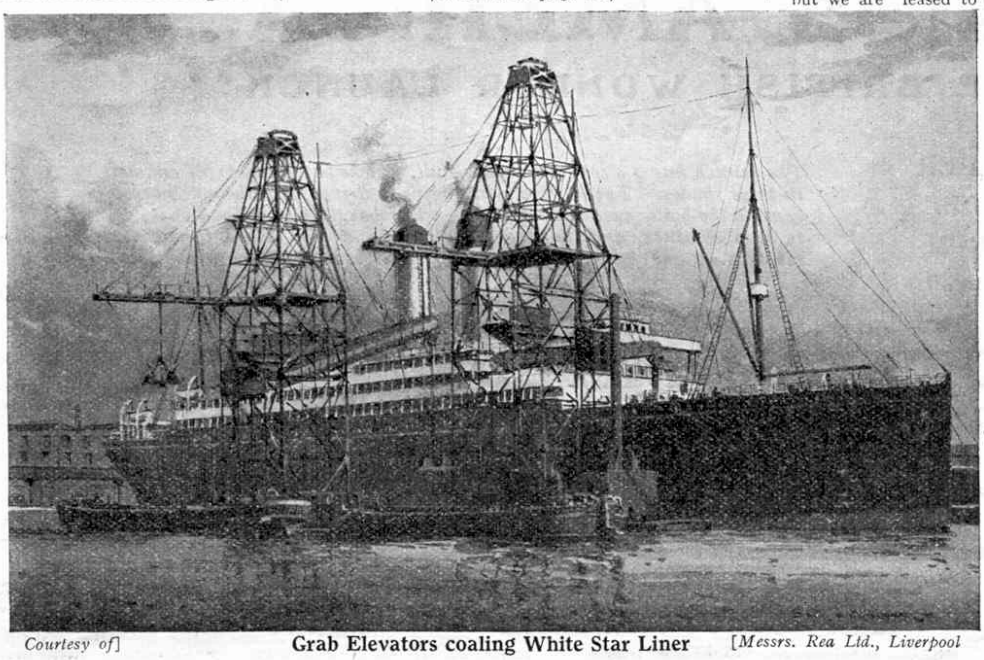

Courtesy of] **Grab Elevators coaling White Star Liner** [*Messrs. Rea Ltd., Liverpool*

OUR MAIL BAG

In this column the Editor replies to letters from his readers, from whom he is always pleased to hear. He receives hundreds of letters each day, but only those that deal with matters of general interest can be dealt with here.

Correspondents will help the Editor if they will write neatly in ink and on one side of the paper only.

W. Sharp (North Shields).—We were very glad to hear of your examination successes, and that our Book Review column helped you to select your book prizes. This is one of the objects for which this column was started. Your suggestion regarding photo-cards of great engineering structures is quite good, and we shall give it serious consideration.

W. F. Kaler (Otago, New Zealand).—We enjoyed reading your interesting letter. Your life seems to be very strenuous at present—up at 5 o'clock every morning, three cows to milk and then a 20-mile train ride to school! To boys living in our great English cities this sounds quite an adventure. Write again soon and give us more details of your life.

S. W. Leem (Peckham, S.E.).—Don't wait another eight years before writing us again! We have had many requests for a reprint of the "*Life Story of Meccano*," and we shall probably publish it again for the benefit of the thousands of new Meccano boys who join up every year. We quickly deciphered your code messages and we thank you for the kind wishes they convey.

J. Barton (Wood Green, N.).—Thanks for photo of your trio of dogs. We hope Bobby is more friendly than he looks. Sorry about the weather during your holidays. We had similar weather here, and it still continues! We were interested in your doings at the seaside.

Peter Keighley (Leeds).—We are always very sorry to hear of Meccano boys being in pain, and we hope you are better now. Write us again soon. We will consider your suggestion regarding the railway articles.

E. H. Medlucott (Bermondsey).—We believe there are very good reasons why every boy should know something of Astronomy, and we are very pleased to hear of your interest in the hobby. Your figures are remarkable, but every boy finds them in his school books, and they would be a little out of place in the "*M.M.*"

A. E. Davis (Boston).—We note that you have "Wembled" and that you enjoyed it very much. Each of the hundreds of boys who have written us of their experiences have told us that they liked the Palace of Engineering best, and that they spent most of their time there—which is quite what we anticipated! We are glad you think the "*M.M.*" has "gone from better, betterer, to betterest!"

I. Burstow (Redcar).—The little thing we did for you was scarcely worth a thousand thousand thanks, but we are leased to have them just the same!

R. Duff (Worthing).—Your suggestion for a Meccano Diary has been put forward by a number of readers during the past few months. We are giving the matter consideration and it may materialise some day. Your proposal that the diary should include pages on which Meccano boys could keep records of models built and invented during the year is quite good. It might be possible also to illustrate the diary by small reproductions of models. We shall be glad to receive any further suggestions for the contents and arrangement of such a diary.

G. Burrell (London, S.W. 19).—Your grievance regarding the number of advertisements in the "*M.M.*" is shared by many other readers, and we are in full sympathy with you. At the same time we want you to understand that without the revenue from our advertisements it would not be possible to publish the Magazine at all, on account of the extremely high cost of paper, printing, etc.

Fun with Bricks

Building houses with miniature bricks is a fascinating pastime that appeals to almost everyone. The artificial stone bricks made by Messrs. Lott's Ltd. (Watford, Herts.), are unique in their wonderful variety. The Tudor blocks are specially interesting, for by means of them realistic models of the old-fashioned half-timbered houses may be built and completed with trees, fences, etc. Lott's Bricks may be used with great success in making stone bridges, viaducts, and other accessories for use with a Hornby Railway.

25 Prizes !

We would draw our readers' attention to the Tan-Sad Picture Puzzle Competition advertised on page 424, in which 25 useful prizes are offered. The firm manufacture scooters, which toys do not appear to be losing any of their popularity. The various types produced by Messrs. Tan-Sad Ltd. are perfect little models. They are strongly made in various grades varying in price from 10/- to 21/-, and all are of good appearance. The 21/- model has a footboard mounted on spiral springs that absorb shocks on rough roads and enable a much greater speed to be attained.

Can you Shoot?

The best games for winter evenings are those in which every member of the family can join. This means that the games must not be too complicated and must provide plenty of fun and excitement. With this end in view Messrs. Rickarby & Partner (37a, Finsbury Square, London, E.C.2) have produced two new games "Popskit" and "Popsnooka." The games consist of shooting a captive cork missile from a spring gun with the object of knocking down coloured skittles, which count different scores. The spring gun is strongly made and reliable, and considerable skill is required to make a good score. These games are very suitable also for bazaars, exhibitions, etc.

A Real Xmas Bazaar

There can be very few British boys who have not heard of Gamages wonderful Christmas bazaar, where every year there is an amazing display. Fortunate indeed are those boys who are able to visit this bazaar and see its treasures for themselves. For those who are unable to do this, a large illustrated Xmas Bazaar catalogue has been prepared. This is packed with descriptions and illustrations of everything dear to the heart of every boy, and a copy will be sent to any reader who writes for it and mentions the "*M.M.*" Apply promptly, as in spite of the enormous numbers printed, supplies will soon become exhausted.

High-Speed Ship-Coaling

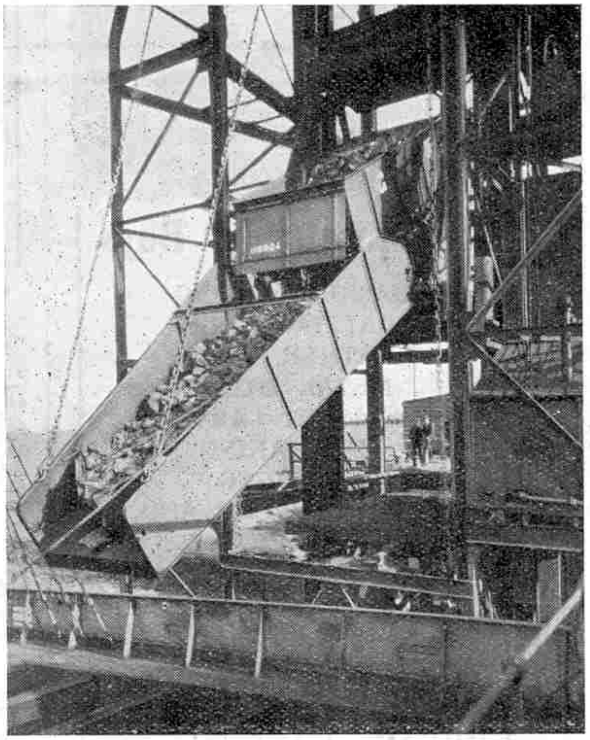

Courtesy] [*G.W.R. Magazine*

Tipping the first of the new 20-ton Coal Wagons at Port Talbot Docks. (*See page* 387)

Fine Model Launches

The fretwork outfits and materials manufactured by Messrs. Hobbies Ltd. (Dereham, Norfolk) are always in great demand for Christmas presents, and this year their quality and variety appear to be better than ever. We strongly advise readers interested in fretwork or carpentry to write for a copy of Messrs. Hobbies 1925 catalogue, which will be sent post free for 9d.

Those interested in model boats will find that Hobbies' launches (ranging in price from 9/6 to 30/-) represent remarkable value. Each launch is strongly made of the best materials and is sold under guarantee. The power units are unusually good, heat being generated by a well-designed lamp. A good head of steam is very quickly obtained, the lamp containing sufficient methylated spirit to drive the larger sized boats at a good speed for 20 minutes. "Peggy," for instance, price 22/6, will cover a mile on the straight at one fill.

A Rifle without a Licence

The B.S.A. bicycle has a big reputation behind it, due to the fact that the high standard of quality of the firm's machines has been consistently maintained in every detail. The various models cover a wide range to suit every requirement, whether touring or racing, a particularly interesting machine being the "All-Weather" bicycle, rust-proof finished throughout with very efficient mud-guarding.

Parents often hesitate to buy guns for their boys on account of the possible danger, but this objection is largely eliminated in the B.S.A. air rifle, which is perfectly safe to use. Although strong and accurate, it is sufficiently light for a boy or lady to handle easily. It is, of course, smokeless and practically noiseless and no cartridges or powder are required. The rifle is sufficiently powerful to kill a rook or sparrow at 50 yards, and at the same time is accurate enough for exacting target work. No licence is necessary to purchase or use it in house or garden in Great Britain.

Saving Life by Wireless—(*cont. from page* 389)

ablaze with light, and with their searchlights concentrated on the stricken vessel. Their decks were crowded with passengers, and it is estimated that some 7,000 spectators were watching the "*Volturno.*" Shortly before midnight an explosion destroyed the "*Volturno's*" dynamos, extinguishing her lights and compelling her wireless operator to work on accumulators.

Meanwhile the "*Carmania's*" wireless operator had been sending out far and wide an urgent call for help from any oil tank steamer that might be in the neighbourhood, and presently a response came from the captain of the "*Narragansett,*" "I will be with you by five o'clock." Steaming at her utmost speed, the "tanker" arrived at daybreak and at once commenced to pour out two great streams of oil, which formed a calm area of water at the stern of the "*Volturno.*" By this time also the gale had moderated a little and a great flotilla of boats put off from the various liners and gathered in the oil-calmed area. The work of rescue was quickly and skilfully carried out, and by nine o'clock in the morning the 521 passengers and crew were safely removed. Of the 136 persons who lost their lives, about 50 were killed by explosions and fire, and the remainder were drowned while endeavouring to launch boats before the arrival of the "*Carmania.*"

These are two typical examples of the life-saving work of wireless telegraphy in its early days. There have been many others since, and especially during the war, when ships were being sunk daily by enemy submarines. At that time "S.O.S." signals were very frequent, and it is believed that during the war-years alone the lives saved by means of wireless must number hundreds of thousands.

How an "S.O.S." is Sent Out

"S.O.S." does not stand for "save our souls" or "send out succour," nor indeed for any other similar phrase, as many people appear to believe. The three letters were chosen because they make a rhythmic signal in the Morse code. As most of our readers know, the "s" signal in Morse consists of three dots and the "o" signal of three dashes, so that when ". . . – – – . . ." is repeatedly sent out its peculiar rhythm at once attracts the attention of all who are listening. There is no pause between the letters, the three dots, three dashes and three dots being sent out as though they signified one letter only. The distress call is always sent out with the full power available and with untuned signals, and it thus "jams" all other stations within range, whatever their wave-length.

After repeating "S.O.S." several times, the ship gives her position in longitude and latitude and states briefly the nature of the trouble, how long she expects to remain afloat, and so on. The operator then switches over to his receiving set and listens for a reply. If none is received he repeats the original message.

DRAG-LINE CONTEST

The Result of this Contest will be announced next month

A New Meccano Model—(*cont. from p.* 387)

7 holes, and the truck runway Girders are secured to the inner ends of the grab runway rails (3) by two 12½" Strips (5), overlapped 7 holes.

The grab rails (3) are spaced centrally in the head of the tower by means of a Rod (6, Fig. A) which is passed through the second hole from the end of the Angle Girders, and fixed by Collars (7) on the outer ends of the Rod and by other Collars (8) which fit closely against the outer sides of the rails.

The extreme ends of the Angle Girders are connected by 3½" Strips (9a) and 3½" × ½" Double Angle Strips (9) connect the upper 12½" Strips (10). The lower truck rail Angle Girders (3) are maintained centrally in the tower by being bolted to the transverse Angle Girder (11) and the Strips (10) of the truck runway by means of Angle Brackets to the Angle Girder (2). The other details of construction of these rail arms and the tower and tower-head can be clearly followed from the illustrations.

(*To be continued*)

A NEW MECCANO MODEL

Model No. 734. Ship-Coaler

(Continued)

LAST month we learned something of the work done by mechanical coalers in coaling ships at high speed, and we gave the first part of the instructions for building a splendid Meccano model of a High-Speed Ship-Coaler. In this issue we continue these instructions and give also a list of parts required to build the model.

The High-Speed Ship-Coaler is one of the most interesting of Meccano models, for all the movements for coaling a miniature ship are controlled from the gear-box. The model will appeal to every Meccano boy, because when it has been built it affords endless fun, and no little dexterity is required for its operation. There are so many movements that the operator has to use his intelligence and has to be quick with his fingers in order to carry out all of them successfully.

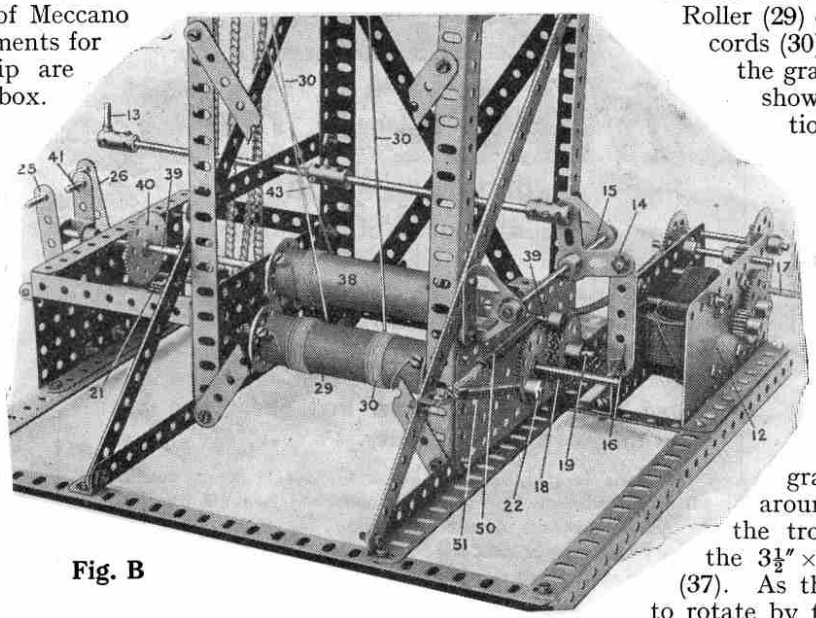

Fig. B

Motor Control Mechanism

Having constructed the main tower and the run-ways for the grab, we proceed to fit the Electric Motor (12, Fig. B), which is started, stopped or reversed by the handle (13). This is connected to a Bell Crank (14) pivotally mounted on a Rod (15) journalled in Trunnions and coupled by a $2\frac{1}{2}''$ Strip (16) to the control handle of the Motor.

From a $\frac{3}{4}''$ Sprocket Wheel on the Rod (17) the Motor drives a $1\frac{1}{2}''$ Sprocket (18) on the Rod (19, Fig. B), which carries two $\frac{1}{2}''$ Pinions (20 and 21, Figs. B and C) on either side of the Rod (19). These are slideably mounted in the Perforated Plates (42). On the ends of the two Rods (22 and 23) are Double Brackets enclosed by Collars (24), the Brackets being connected to $3\frac{1}{2}''$ Strips (25 and 26). These Rods (22 and 23) form operating levers for pushing the Rods (22 and 23) in or out.

The Double Brackets are lock-nutted to the bolts pivotally connecting them to the Strips (25 and 26), so as to enable the Strips to move freely on the bolts without disturbing their connection with the Double Brackets, Similarly, the pivotal bolts of the Strips (25 and 26) are lock-nutted to the 1″ Brackets (27), leaving the pivotal Nuts of the Strips (25 and 26) free on these Bolts.

The Gear-Operating Mechanism

A 57-toothed Gear Wheel (28) on the Rod (22) is adapted to engage or disengage with the Pinion (20) on the Rod (19). This drives the Roller (29) on which are wound the cords (30). These open and close the grab, details of which were shown in the larger illustration last month.

The cords pass from the Roller (29, Fig. D) over the Pulleys (31) and over the outer top Pulleys (32), returning down and passing around $\frac{1}{2}''$ Pulleys (33) on to other $\frac{1}{2}''$ Pulleys (34) on the trolley. From thence the cords pass down and around 1″ Pulleys (35) on the grab, and returning up around $\frac{1}{2}''$ Pulleys (36) on the trolley, are made fast in the $3\frac{1}{2}'' \times \frac{1}{2}''$ Double Angle Strip (37). As the Roller (29) is caused to rotate by the Motor in one or other direction, the grab will be raised or lowered.

Another Roller (38, Figs. B and C) is mounted on the $11\frac{1}{2}''$ Rod (39). This Rod slides in the Plate (42) directly above the $11\frac{1}{2}''$ Rod (19) carrying the Pinion (21, Figs. B and C). A 57-toothed Gear Wheel (40) on the Rod (39) is engaged or disengaged with the Pinion (21) by the operation of the $3\frac{1}{2}''$ Strip (41). This Strip acts as a control handle in a similar manner to the Strips (25 and 26) and is lock-nutted to the pivotal bolts as previously described.

Opening and Closing the Grab

When the Gear Wheel (40) is engaged with the Pinion (21), which is on the Rod (19) driven by the Motor, the Roller (38) rotates and the cord (43) on that Roller is wound up. This cord passes over an outer 1″ Pulley (44), over a central $1\frac{1}{2}''$ Pulley (45) at the extreme top, down and around a $\frac{1}{2}''$ Pulley (46) to the trolley over a $\frac{1}{2}''$ Pulley (47) thereon. It passes around a 1″ Pulley (48) on the grab below, returning up to and over a $\frac{1}{2}''$ Pulley (49) on the trolley, where it is made fast to

(*Continued on page* 11)

Parts required:

28	of No.	1	2	of No.	17	1	of No.	48D
5	" "	1A	2	" "	18A	1	" "	52
14	" "	2	3	" "	18B	2	" "	53
6	" "	2A	8	" "	20	1	" "	53A
24	" "	3	3	" "	21	1	" "	54
10	" "	4	5	" "	22	50	" "	59
18	" "	5	14	" "	22A	3	" "	63
2	" "	6	10	" "	23	2	" "	70
4	" "	6A	4	" "	24	2	" "	72
8	" "	7	3	" "	26	4	" "	76
6	" "	8	4	" "	27A	2	" "	77
6	" "	9	12	" "	35	4	" "	90
1	" "	9A	280	" "	37	48″	" "	94
4	" "	10	16	" "	37A	1	" "	95A
6	" "	11	30	" "	38	2	" "	96A
18	" "	12	1	" "	40	2	"	103D
5	" "	12A	2	" "	43	2	" "	106
3	" "	13	3	" "	44	2	" "	108
3	" "	14	2	" "	45	2	" "	111
2	" "	15	1	" "	46	8	" "	115
3	" "	15A	1	" "	48	1	" "	124
6	" "	16	7	" "	48A	2	" "	125
2	" "	16A	11	" "	48B	4	" "	126
2	" "	16B	1	" "	48C	1	" "	128

A New Meccano Model—(*cont. from page* 9)

the Double Angle Strips (37). Consequently by manipulating the handle (41) the grab may be opened or closed if it is stationary.

When both the handles (41 and 25) throw the Rods (39 and 22) in gear with the main driving Rod (19), the grab is hoisted or lowered in an open or closed condition.

The Action of the Model

A Spring (50, Fig. B) is engaged over the end of the Rod (39) carrying the Roller (38) and another Spring (51) on the end of the Rod (22). These act as frictional drags or brakes on these Rods, preventing the load in the grab running away when the gears are out of mesh.

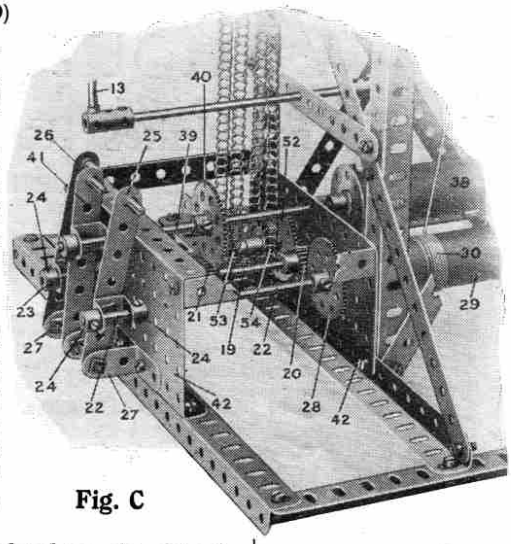

Fig. C

The mechanism is designed so that a load may be picked up by the grab at the outer end of the trolley arm. The load is then raised and the grab travels inwards on the rails (3). Meanwhile, the truck simultaneously travels inwards until, when the grab is over the truck, it (the grab) is opened and the load deposited in the truck.

Both the truck and the grab then travel outwards, the movement being completed by the truck depositing its load down the chute.

The Travelling Grab

This inward and outward travelling action of the grab and the truck is effected from the third handle (26, Fig. C). This controls the Rod (23) on which a 57-toothed Gear Wheel (52), when engaged with the Pinion (20), causes the Rod (23) to be rotated.

The Rod (23) carries two $\frac{3}{4}''$ Sprocket Wheels (53 and 54) which are engaged by Sprocket Chains connected to cords (55 and 56*). The cords (55) pass over 1″ Pulley Wheels (57) and end Pulley Wheels (58, Fig. D) disposed horizontally, being finally connected to the Flat Brackets (59) on the trolley of the grab. Consequently as the Sprocket Wheel and Chain (53) is wound in one or other direction, according to the direction of rotation of the main driving Rod (19), so will the grab and its trolley be caused to travel in or out along the rails (3).

Simultaneous Action of Grab and Truck

Similarly the cords (56) from the other Sprocket pass over 1″ Pulleys (60*), around 1″ Pulleys (61), horizontally arranged, the ends of the cord being connected to Brackets (62) at each end of the truck (62, Fig. E). As the Sprocket Chains (53 and 54) rotate together, both the grab and the truck travel at the same time, but in order to ensure that they travel in opposite directions, so that they both move inwards or outwards together, the cords (56) are crossed before they pass over the Pulleys (60), while the cords (55) are left open.

As the truck approaches the outer end of its travel, it discharges its contents down the chute as previously mentioned. To enable this to take place, the bottom of the truck (63) is pivoted (as shown in Fig. E) on a 3″ Rod (64). At the other end of the bottom Plate (63) is a $\frac{1}{2}''$ Pulley (65), carried on a $1\frac{1}{2}''$ Rod (66) mounted in a $1\frac{1}{2}''$ Double Angle Strip (67) secured to the base and spaced by five Washers (69).

In the centre of the rails (3) on the truck run-way a central Strip (68) is provided on which the $\frac{1}{2}''$ Pulley (65) runs. This Strip (68) is bent downward as it reaches the chute. Consequently, as the base of the truck reaches the chute, the wheel (65) rides down the bent end (68) and permits the bottom of the truck to open and the load to be discharged.

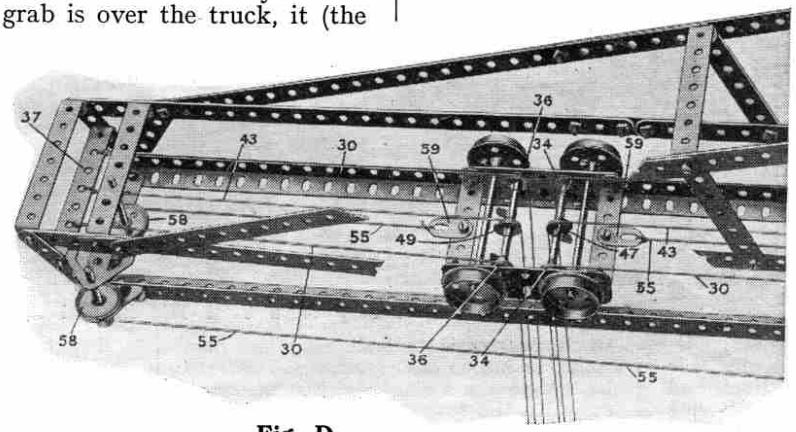

Fig. D

*See illustration in last month's "*M.M.*"

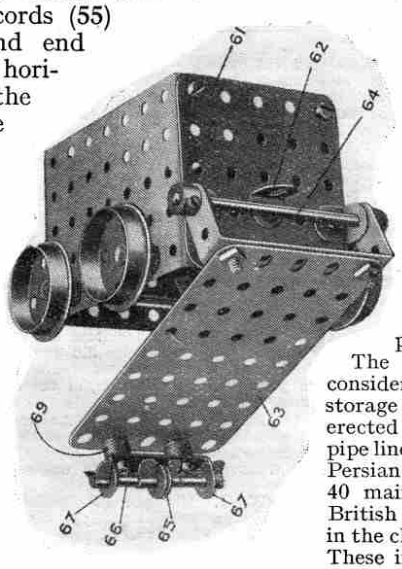

Fig. E

NEXT MONTH:

Another New Meccano Model TRACTOR

Advantages of Oil Fuel

The number of steamships burning oil fuel is already very large and it is increasing. Many up-to-date vessels are constructed to burn either coal or oil, this arrangement enabling their owners to take advantage of the state of the respective markets in the two fuels. As far back as 1904 the Admiralty were seriously considering the conversion of the Navy to oil fuel, and in 1912 Mr. Winston Churchill, then First Lord of the Admiralty, appointed a Royal Commission with Lord Fisher as president to consider the whole question of oil fuel and to advise the Government. After hearing evidence from all points of view, the Commission came to the conclusion that, assuming the necessary oil supplies could be assured, there would be no great risk in the conversion of the Navy from coal, and that whether there was risk or not the conversion would have to be undertaken. From that time onward the conversion proceeded rapidly, and to-day practically every ship in the Navy burns oil fuel.

The growing demand for oil fuel has necessitated considerable developments in all the principal docks. Huge storage tanks holding millions of gallons of oil have been erected at suitable points along the various docks, with pipe lines running to the points of bunkering. The Anglo-Persian Oil Co., for instance, have established more than 40 main bunkering installations on the shores of the British Isles, at the principal Continental ports, and also in the chief shipping centres of Asia, Africa and Australia. These installations, the number of which is continually being increased, comply with the two essential conditions of ample storage capacity and rapid delivery to ships.