New Meccano Model

Clockwork-Driven Pacific Type Express Passenger Tank Locomotive

OUR model this month is of a Pacific type tank locomotive of particularly pleasing appearance. It is driven by a Meccano Clockwork Motor incorporated in the firebox, and will run on Hornby Rails (Gauge 0).

Many of our readers (especially those who are H.R.C. members) will know that the 4–6–2 or "Pacific" type of wheel formation is met with comparatively rarely in British tank engine design, although in the tender engine it has considerable popularity, notably on the L.N.E.R., where the "*Flying Scotsman*" is its most famous exponent.

A tank engine is designed primarily for working freight or suburban passenger trains over comparatively short distances, when it is not necessary to carry huge quantities of coal and water. Nowadays, however, express passenger trains running over distances ranging from 50 to 100 miles are frequently hauled by tank engines, and it is this type of locomotive, which may be known as the express passenger tank, that the model illustrated on this page is intended to represent.

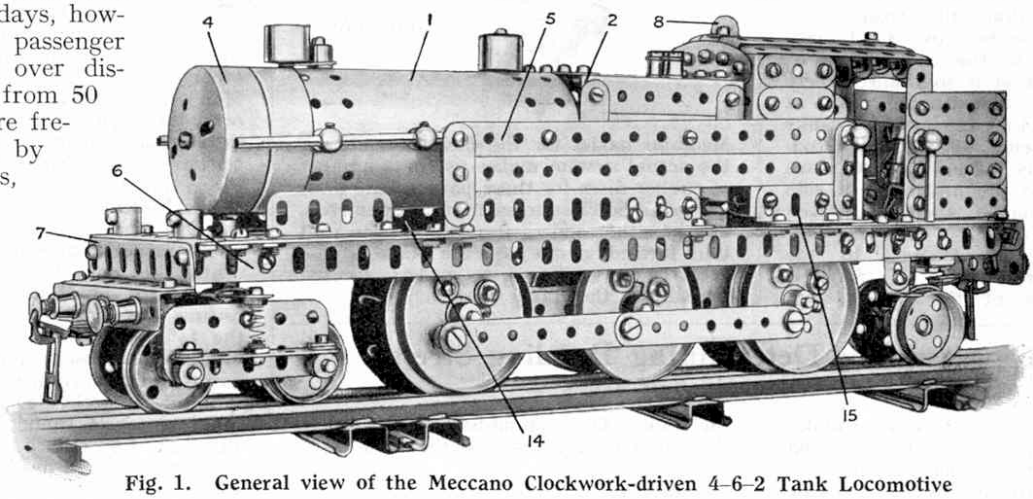

Fig. 1. General view of the Meccano Clockwork-driven 4–6–2 Tank Locomotive

As it is the frame of the engine that first receives attention in the engine shop, we will commence the construction of the model by assembling this portion.

The frame is shown clearly in Fig. 3 and it will be seen that each side member comprises a 12½″ Angle Girder extended by a 3½″ Girder. The rectangular frame is completed by bolting 3½″ Girders to the ends of the side members, additional Girders 7 being attached at the front of the frame to form the extended front buffer beam. The buffer beam at the rear of the engine comprises a 3½″ Flat Girder secured to the 3½″ Angle Girder forming the end of the frame. Meccano Spring Buffers and Couplings are secured to each of the buffer beams in the positions indicated.

A 7½″ Angle Girder 14 is bolted to the right-hand side of the main frame and to each of its ends a 1½″ Strip is secured in a vertical position. Two 7½″ Strips bolted to these complete the right-hand side tank. The left-hand tank 5 is constructed similarly, with the exception that 4½″ and 2½″ Girders are used in place of the 7½″ Girder, so that an aperture is formed through which the winding key of the Clockwork Motor may be passed.

It will be seen that the rear portion of the tanks form part of the cab sides. To complete the cab, Angle Girders 16 (Fig. 3) are bolted to the Girders 14 and 15, and 2½″ Strips are secured two holes further back, while 1½″ Strips hold the Strips and Girders at the correct distance apart (see Fig. 1).

The Roof and Firebox

The roof is composed of four 3½″ × ½″ Double Angle Strips and one 3½″ Strip spaced by two 2½″ large radius Curved Strips, one of which is bolted between the tops of the Girders 16 whilst the other is bolted across two 3″ Angle Girders 17. The 3½″ Strip in the centre of the roof is supported by Angle Brackets; this Strip is used instead of a Double Angle Strip so that advantage may be taken of the play in the securing bolts to obtain a slot through which may protrude the reversing lever 8 (Fig. 1) of the Clockwork Motor. Four 2″ Strips form each side of the coal bunker and two Girder Brackets bolted to their ends form the rear, the space between these Girders being filled in by a 2″ Strip.

The construction of the firebox may now be proceeded with. As will be seen from Fig. 1 the firebox top consists of two 3″ Angle Girders 2 spaced apart by 2″ Strips. Two 3″ Strips are secured between the Girders and to these the Ross-Pop safety valve is secured. The valve consists of two outer "sleeves" removed from Meccano Spring Buffers, and these are held in place by means of Pivot Bolts.

Each side of the firebox consists of two horizontal 3″ Strips

Parts required to build the Model 4–6–2 Tank Loco:

6 of No. 1b	2 of No. 10	25 of No. 38	1 of No. 111c
5 „ „ 3	8 „ „ 12	5 „ „ 48b	1 „ „ 115
7 „ „ 4	1 „ „ 12a	2 „ „ 50a	6 „ „ 120a
5 „ „ 5	2 „ „ 12b	25 „ „ 59	2 „ „ 120b
11 „ „ 6	4 „ „ 16	4 „ „ 62b	2 „ „ 121
9 „ „ 6a	2 „ „ 16a	2 „ „ 64	8 „ „ 136
2 „ „ 8	4 „ „ 17	3 „ „ 90	6 „ „ 137
1 „ „ 8b	5 „ „ 18a	1 „ „ 103d	8 „ „ 147b
3 „ „ 9	6 „ „ 20	2 „ „ 103e	2 „ „ 161
6 „ „ 9b	2 „ „ 24	2 „ „ 103f	1 „ „ 162a
4 „ „ 9c	1 „ „ 25	6 „ „ 109	2 „ „ 164
2 „ „ 9d	156 „ „ 37	3 „ „ 111	1 „ „ 166
3 „ „ 9e	8 „ „ 37a	1 „ „ 111a	1 Clockwork Motor

secured at their ends to vertical $1\frac{1}{2}''$ Strips which, in turn, are bolted to the sides of the Girders 2.

The firebox is held in position by means of an Angle Bracket bolted to the cab, and Flat Brackets secured to the Boiler 1. The Meccano Boiler is secured in position by bolts passed through the side tanks, and by two 2″ Angle Girders bolted to Flat Girders that, in turn, are secured to the front of side frames of the locomotive.

Two Chimney Adapters are mounted on the Boiler, one being inverted to form the steam dome while the other represents the chimney. Handrail Supports are secured to the sides of the Boiler and carry Axle Rods which form the handrails. The smoke-box 4 is formed from two Boiler Ends held together by a $\frac{3}{4}''$ Bolt passed through their centres.

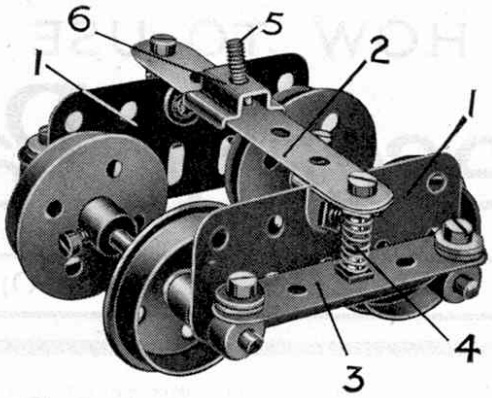

Fig. 2. The Front Bogie, showing springs and equalising beams

Assembly of the Power Unit

Fig. 4 shows the power unit. This consists of the Clockwork Motor, the drive being taken from the pinion on the driving shaft by a $\frac{3}{4}''$ Pinion 12 on the Axle of the rear pair of driving wheels.

A $7\frac{1}{2}''$ Strip is bolted to each side plate of the Motor to form a journal for the axle carrying the rear pair of driving wheels, and two $5\frac{1}{2}''$ Angle Girders are also secured in position to give extra strength. Three $2\frac{1}{2}''$ Rods carry the driving wheels, the front and rear pairs of which consist of Wheel Flanges bolted to Face Plates. The centre pair of Wheels are not provided with flanges, Bush Wheels being substituted for the Face Plates, thus allowing the loco to negotiate sharper curves than would otherwise be possible. The Motor is held in position by Axle Rods passed through the Double Arm Cranks 10 (Fig. 3) so that the reversing lever 8 (see Fig. 1) passes through the cab top. A $1\frac{1}{2}''$ Strip is bolted to the brake lever and an End Bearing is connected pivotally to its extremity. This carries an Axle Rod which, after passing through a $1'' \times 1''$ Angle Bracket secured to the coal bunker, is fitted with a Collar to form a control knob.

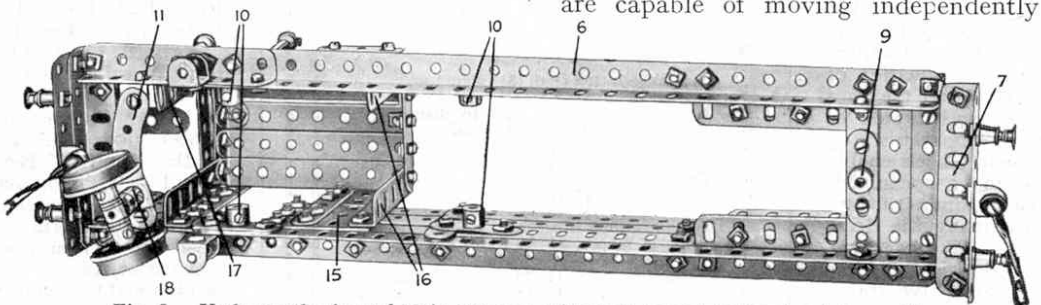

Fig. 3. Underneath view of Main Frames, with rear pony truck and cab in position

The rear pony truck can be seen in Figs. 1 and 3. It consists of two $1\frac{1}{8}''$ Flanged Wheels mounted on a $1\frac{1}{2}''$ Rod that is passed through a Collar. A Threaded Pin gripped in the tapped hole of this Collar is secured in the boss of an Eye Piece 18, which slides on the $2\frac{1}{2}''$ Curved Strip 11 (Fig. 3) that is bolted to the side Girders 6 by Angle Brackets. The pony truck is spaced away from the Eye Piece by an extra Collar mounted on the Threaded Pin.

Bogie with Equalising Beams

The bogie employed in the model is the standard equalising pattern, which forms the subject of S.M. 219 in the new edition of the "*Standard Mechanisms*" Manual. For the benefit of those readers who are unable to refer to this Manual we illustrate the bogie in Fig. 2.

Two $2\frac{1}{2}''$ Flat Girders 1 are connected together by means of a 3″ Strip 2 and Angle Brackets. The Axle Rods carrying the Flanged Wheels are passed through the elongated holes of the Flat Girders into Collars. The latter are secured together in pairs by $2\frac{1}{2}''$ Strips 3, through the centre holes of which a bolt is passed and secured with its shank upwards. Compression Springs 4 are passed over these and also over the shanks of the bolts at each end of the Strip 2. The bogie is attached to the loco by means of the Eye Piece 6, which is connected pivotally to the Double Arm Crank 9 (Fig. 3). Owing to the arrangement of the Strips 3, which act as the equalising beams, the wheels are capable of moving independently in a vertical direction.

In the illustration, an old style Eye Piece without boss is shown, but the new pattern Eye Piece, which is of course fitted with a boss, should be used if available. If the old pattern is employed, this should be pivoted to the frame of the engine by means of a $\frac{3}{4}''$ Bolt passed through the Eye Piece and into the boss of the Double Arm Crank 9, the Bolt being held rigidly in place in the boss of the Crank by means of its set-screw. A Collar should be placed upon this Bolt between the Eye Piece and the boss of the Double Arm Crank so that the bogie wheels will make contact with the rails when the completed model is placed upon the track.

When using the new style Eye Piece a 1″ Axle Rod serves as a bogie pivot. This Rod is held in the boss of the Eye Piece, is passed through the boss of the Double Arm Crank 9, and finally secured in place by means of a Collar that can be seen on the front upper surface of the engine frame (Fig. 1).

In Fig. 1 it will be noticed that the Chimney Adaptor, representing the chimney of the locomotive, is bolted to a Flat Bracket held to the Boiler by a $\frac{1}{2}''$ Bolt. A Collar placed on this Bolt represents the casing enclosing the superheater shifting valves which enable the driver to release the vacuum in the superheater headers when coasting.

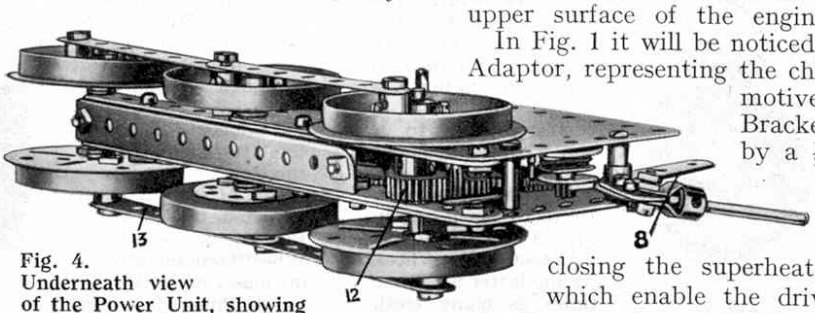

Fig. 4. Underneath view of the Power Unit, showing connecting rods, etc.