shown separately in Fig. 2. Two ½" Pinions 9 are fixed on a 2" Rod held in a Coupling that supports also a 3½" Rod that carries two ½" Pinions 10. The Pinions 10 rest on the Centre Forks 6, and the Centre Forks 7 are arranged so that their prongs are located between the teeth of the Pinions 9.

The Rod 5 is extended by an 8" Rod connected to it by a Coupling, and a Boiler 11 is placed on this Rod. The lower end of the Rod carries an End Bearing and this is connected by Cord to another End Bearing on an 11½" Rod 12. Two 3" Pulleys with Tyres are fixed on Rod 12 to form bob weights, and the Boiler 11 should be heavily weighted by placing in it any suitable parts left over when the model is completed. This arrangement forms a compound pendulum, and when the two weights on it are set swinging in different directions they impart a complicated motion to the drawing table above them.

The centre section of the pen arm consists of two 2½" Strips 13 connected by two Double Brackets, and fitted at each end with 2" and 3" Strips as shown. The lower ends of the 2" Strips also are connected by Double Brackets, and on one side the 2" and 3" Strips support two 12½" Strips 14. The 2" and 3" Strips on the other side are connected by 2½" Strips, the outer ends of which are joined by a Double Bracket. An 11½" Rod 15 is held by Collars in the Double Brackets at this end of the pen arm.

The pen arm also is mounted on knife-edge bearings, as shown in Fig. 4. Two ½" Pinions 16 are fixed on a 3½" Rod held in Cranks bolted to a 2½"×1½" Double Angle Strip attached to Double Angle Strip 4. Two Couplings 17, one on each side, are fixed on 2" Rods passed through the pen arm, but spaced from it by Washers on the Rods. A Centre Fork held in each Coupling rests between the teeth of one of the Pinions 16.

A ball point pen is placed between the ends of Strips 14, and two ¾" Bolts, passed through holes in the Strips, are used to clamp the pen in position. A sliding balance weight 18, which in our model is a ½" diam. ¾" face Pinion, is placed on Rod 15, so that when the weight is moved to the outer end of the Rod the pen is raised clear of the table. By sliding the weight inward the pen is lowered until it rests on a sheet of paper clamped to the table by Driving Bands.

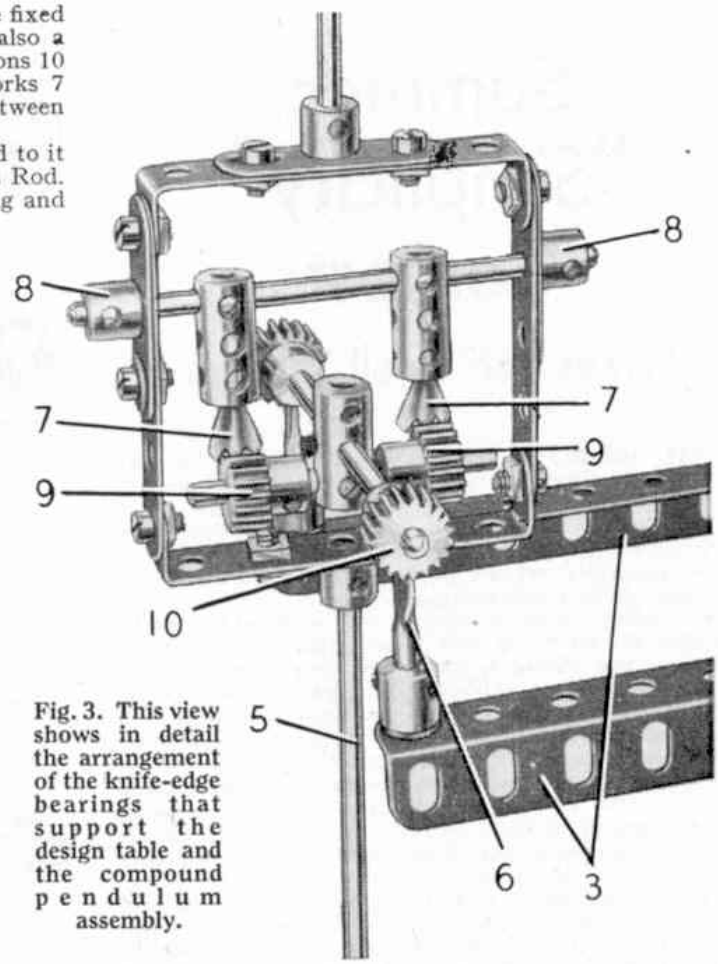

Fig. 3. This view shows in detail the arrangement of the knife-edge bearings that support the design table and the compound pendulum assembly.

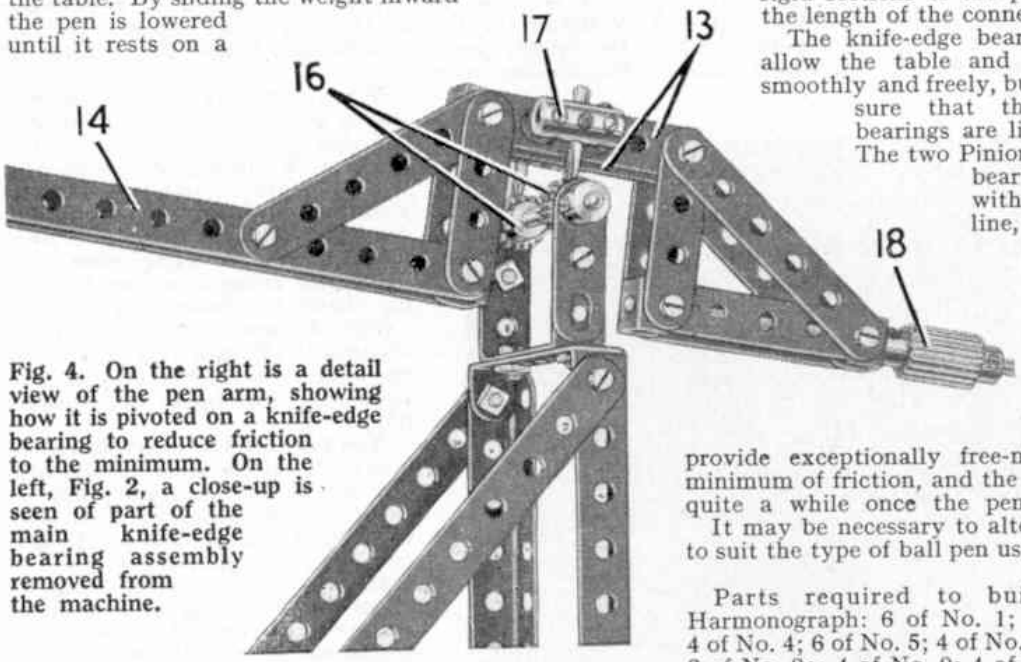

Fig. 4. On the right is a detail view of the pen arm, showing how it is pivoted on a knife-edge bearing to reduce friction to the minimum. On the left, Fig. 2, a close-up is seen of part of the main knife-edge bearing assembly removed from the machine.

To operate the model first the pen should be raised clear of the paper, and then the pendulum should be set swinging. Then the pen can be brought into contact with the paper when it will commence to trace a pattern governed by the swing of the pendulum. The swing can be varied in many ways by making use of the compound pendulum with its two weights, and further variety can be introduced by altering the values of the weights and by adjusting the relative lengths of the two rigid sections of the pendulum, or by altering the length of the connecting Cord.

The knife-edge bearings used in the model allow the table and the pen arm to move smoothly and freely, but it is necessary to make sure that the components of the bearings are lined up very accurately. The two Pinions that form part of each bearing must be arranged with their teeth exactly in line, and the prongs of the Centre Forks must be parallel to the teeth while the Centre Forks themselves must be in line with each other. If the parts are assembled carefully they provide exceptionally free-moving bearings with a minimum of friction, and the model should operate for quite a while once the pendulum starts its swing.

It may be necessary to alter the value of weight 18 to suit the type of ball pen used.

Parts required to build the Twin-Elliptic Harmonograph: 6 of No. 1; 6 of No. 2; 2 of No. 3; 4 of No. 4; 6 of No. 5; 4 of No. 6; 2 of No. 7a; 5 of No. 8; 2 of No. 8a; 4 of No. 9; 4 of No. 11; 3 of No. 13; 1 of No. 13a; 1 of No. 14; 3 of No. 16; 3 of No. 17; 2 of No. 19b; 1 of No. 24; 6 of No. 26; 1 of No. 26b; 72 of No. 37a; 70 of No. 37b; 40 of No. 38; 1 of No. 40; 1 of No. 47; 2 of No. 48a; 1 of No. 48b; 2 of No. 48d; 3 of No. 59; 2 of No. 62; 4 of No. 62b; 6 of No. 63; 6 of No. 65; 2 of No. 111; 2 of No. 142b; 1 of No. 162; 2 of No. 166; 2 of No. 179; 2 of No. 186c; 3 of No. 192.

New Meccano Model

A Fascinating Designing Machine

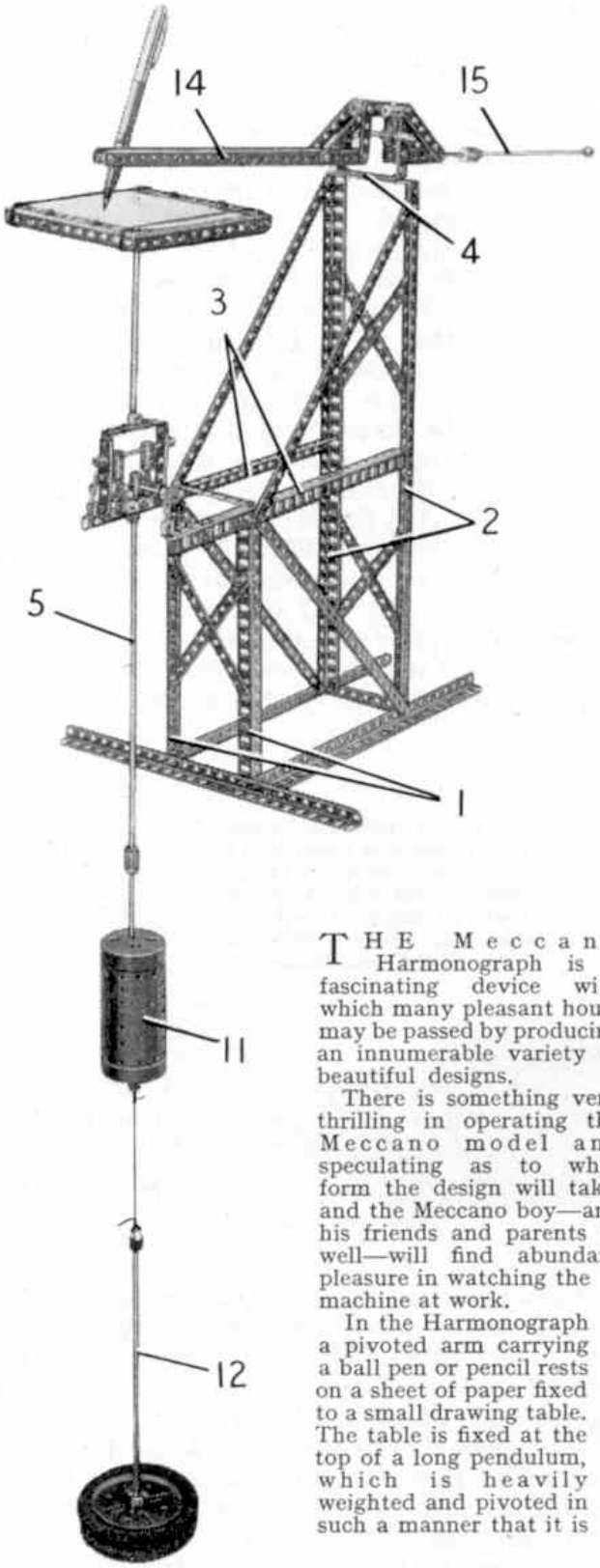

Fig. 1. This interesting machine will produce patterns by tracing the movements of a swinging compound pendulum.

THE Meccano Harmonograph is a fascinating device with which many pleasant hours may be passed by producing an innumerable variety of beautiful designs.

There is something very thrilling in operating the Meccano model and speculating as to what form the design will take, and the Meccano boy—and his friends and parents as well—will find abundant pleasure in watching the machine at work.

In the Harmonograph a pivoted arm carrying a ball pen or pencil rests on a sheet of paper fixed to a small drawing table. The table is fixed at the top of a long pendulum, which is heavily weighted and pivoted in such a manner that it is free to move in any direction when the pendulum is set swinging. As the table moves the pen traces on the paper a design. The design varies according to the direction and extent of the movement of the pendulum and some of these assume very intriguing and beautiful forms. Further variety can be produced by varying the mass of the weight and by altering the length of the pendulum. Also if instead of only one pendulum, two or more are employed and so arranged that their combined movements operate the same pencil the resultant designs become much more complex and beautiful.

The Harmonograph is so simple that the youngest child can obtain successful results. All that is necessary is to clamp a sheet of white paper to the table of the machine using Driving Bands, fit a ball pen to the pivoted arm and then set the pendulum rod and weights swinging.

Construction of the model is begun by assembling a simple but strongly braced frame to support the pendulum and table and the pen arm. The main uprights of this frame are two 9½" Angle Girders 1 and two 18½" Angle Girders 2 (Fig. 1). These are connected at the base by a 3½" Strip and three 12½" Angle Girders, and two 12½" Angle Girders 3 are bolted between the Girders 2 and the top ends of Girders 1. A 3½" × ½" Double Angle Strip 4 is fixed between the upper ends of Girders 2 and the frame is braced by 5½" and 12½" Strips.

Two 2½" × ½" Double Angle Strips, each fitted with a Double Arm Crank are connected by two 2½" Strips. A 6½" Rod is held in the upper Double Arm Crank and to its top end is fixed a Bush Wheel. The latter is bolted to two 5½" × ½" Double Angle Strips, which are attached to two of the four 5½" Angle Girders that form the table to which the paper is fixed. The face of the table is filled in with three 5½" × 2½" Flexible Plates. An 11½" Rod 5 is held in the lower Double Arm Crank and forms part of the pendulum.

The frame that supports the table and pendulum is mounted universally, which means that it is free to move in all directions, on special bearings designed to reduce friction to the minimum. These are known as "knife-edge" bearings, and they make use of the Meccano Centre Fork. A close-up view of the arrangement of these bearings is shown in Fig. 3 and it will be seen that a Centre Fork 6 is held in a Rod Socket fixed to each of the Girders 3. Two further Centre Forks 7 are held in Couplings fastened on a 3½" Rod, and this Rod is fixed in Double Arm Cranks 8 bolted to the pendulum and table frame.

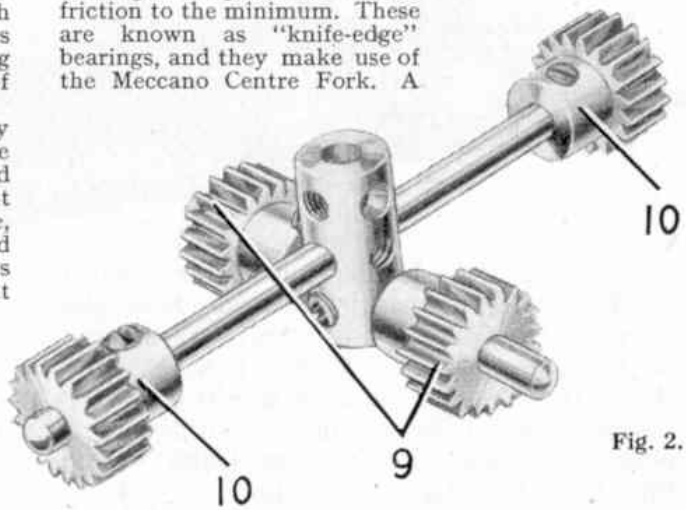

Fig. 2.

The other section of the knife-edge bearing unit is