New Meccano Models

Spring Balance and Streamlined Locomotive

THE two models we describe and illustrate this month are unusually attractive, and at the same time provide an interesting contrast with each other. One is a spring balance that can actually be used for articles that weigh up to about 8 oz. The other is a handsome miniature of the streamlined L.N.E.R. locomotive *"Sir Nigel Gresley,"* the 100th "Pacific" built by the famous locomotive designer whose name it carries.

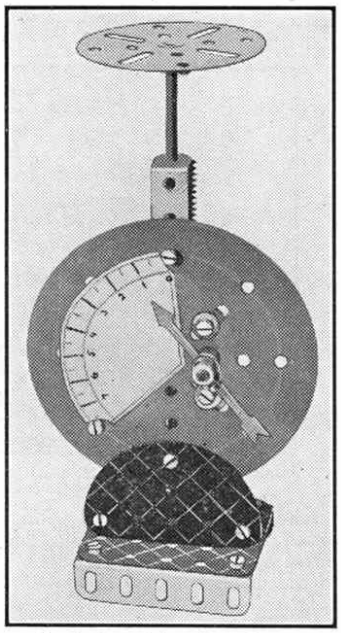

Fig. 1. A useful spring balance.

The balance is the simpler of the two models. It is shown in Figs. 1 and 3, and its construction is commenced with the base. A 2½″×2½″ Flat Plate is bolted to two 2½″ Angle Girders, and a similar Angle Girder is then secured to the base and has a Semi-Circular Plate attached to it. A 4″ diam. Circular Plate and a 4½″×½″ Double Angle Strip 1 are fixed to the Semi-Circular Plate, the Double Angle Strip forming the bearings for a 6½″ Rod 2, which carries at its upper end a Face Plate that serves as the scale pan. This Rod also carries three Collars, to the upper pair of which is bolted a 3½″ Rack Strip 3. The Rack Strip engages a ½″ Pinion 4, fixed on the end of a 1½″ Rod journalled in the Circular Plate and a Double Arm Crank. The other end of this Rod carries a Pointer.

When a letter or other article is placed on the pan the 6½″ Rod compresses two Compression Springs 5 on the Rod 2. The Rack Strip is maintained in engagement with the Pinion by a 2″ Strip 6 bolted to a Double Bracket attached to the Circular Plate.

Parts required to build model letter balance: 1 of No. 6; 3 of No. 9d; 1 of No. 11; 1 of No. 14; 1 of No. 18a; 1 of No. 26; 14 of No. 37a; 16 of No. 37b; 11 of No. 38; 1 of No. 48c; 4 of No. 59; 1 of No. 62b; 1 of No. 72; 1 of No. 109; 1 of No. 110; 2 of No. 120b; 1 of No. 146a; 1 of No. 156; 1 of No. 214.

A general view of the model locomotive is shown in Fig. 4, and Fig. 2 shows what it looks like underneath. It is driven by either an E1 or an E120 Electric Motor. The chassis is the first part to build. Two 9½″ Strips 1 are spaced apart by two 2½″×2½″ Flat Plates 2, and are connected to 12½″ Flat Girders 3 at each side by ½″×½″ Angle Brackets. Two 5½″ Angle Girders are attached to the Plates 2, and 5½″ Flat Girders fixed to these by 1½″ Strips form the bearings for the axles of the driving wheels, which are 2″ Pulleys mounted on 1½″ Rods. They are linked together by 5½″ Strips lock-nutted to them, but are spaced from the Pulleys by three Washers.

The front of the engine is now built up and the valve gear connected to the centre pair of driving wheels, but the Plates covering the boiler are not bolted in position until the Electric Motor is fixed in the chassis.

The 12½″ Flat Girders 3 are extended 1″ to the rear by two 2″ Flat Girders bolted to them. An E1 or E120 Electric Motor 4 is bolted by one of its flanges to one of these compound Flat Girders, and also is attached by a ½″ Reversed Angle Bracket to the rear Flat Plate 2, and by a 1″×½″ Angle Bracket to the Flat Girder 3. The drive from the Motor is taken from the Motor pinion to a 57-teeth Gear mounted on a 2″ Rod journalled in the Motor sideplates. This Rod also carries a ½″ fast Pulley that is connected by a 6″ Driving Band to a 1″ Pulley mounted on a 1″ Rod journalled in Trunnions bolted to the Strips 1. A 2½″ Driving Band links this Rod with a 1″ Pulley 5 on the axle of the centre driving wheels.

The casing for the rear bogie consists of two 2½″ Flat Girders spaced by two 1½″×½″ Double Angle Strips. Two 2½″×1½″ Flexible Plates are bolted to the Double Angle Strips and bent round and secured to the ends of the Flat Girders by ½″×½″ Angle Brackets. Two loose 1″ Pulleys are lock-nutted to the sides of the casing, which is then pivoted to a ½″ Reversed Angle Bracket bolted to the Motor sideplates.

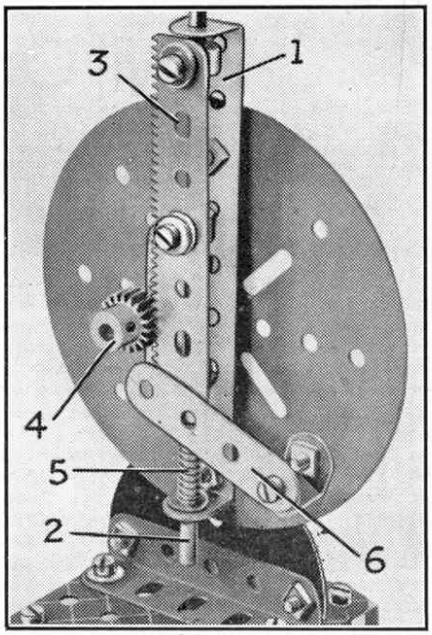

Fig. 3. Rear view of the spring balance.

The model is completed by bolting the boiler plates to a 12½″ Strip, which is arranged down the centre top of the boiler and bent so that its forward end may be attached to the buffer beam. The cab is built from 2½″×1½″ Flexible Plates bolted to the compound flat girders and attached at their upper ends to a large radius Curved Plate.

Suitable straight and large radius Curved Rails for the locomotive may be constructed from Angle Girders and Strips connected by Screwed Rods. A centre rail is then secured between these, but is insulated from them, and arranged to contact a current collector formed with a piece of springy brass and fixed to the locomotive chassis. The collector is insulated from the chassis and is connected by wire to the insulated terminal of the driving Motor.

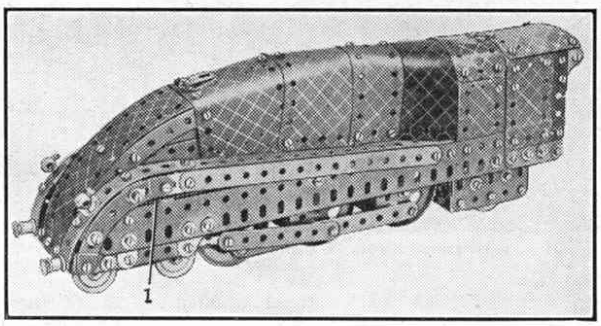

Fig. 4. An attractive streamlined locomotive driven by an Electric Motor.

It is important to make sure that all the wheels are in correct alignment and rotate freely in their bearings.

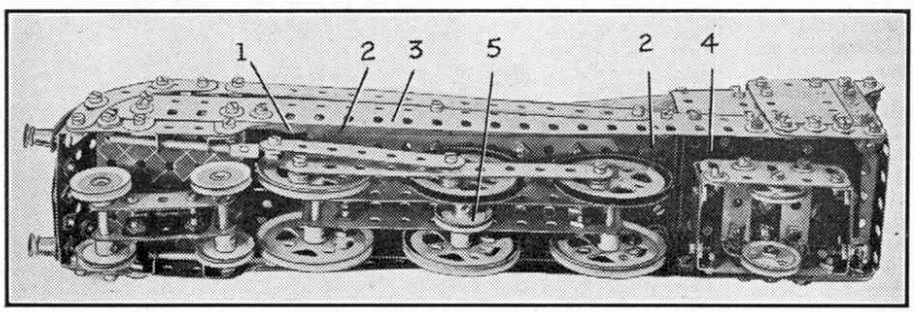

Fig. 2. An underneath view of the streamlined locomotive shown in Fig. 4.

Parts required to build streamlined locomotive: 1 of No. 1; 2 of No. 1a; 6 of No. 1b; 2 of No. 2; 2 of No. 2a; 2 of No. 3; 2 of No. 4; 7 of No. 5; 2 of No. 6; 4 of No. 6a; 2 of No. 9; 2 of No. 9d; 5 of No. 10; 27 of No. 12; 1 of No. 12b; 4 of No. 12c; 2 of No. 16a; 1 of No. 17; 3 of No. 18a; 3 of No. 18b; 6 of No. 20a; 6 of No. 22; 2 of No. 22a; 1 of No. 23a; 1 of No. 27a; 190 of No. 37a; 180 of No. 37b; 54 of No. 38; 1 of No. 47; 3 of No. 48; 1 of No. 48a; 1 of No. 59; 3 of No. 72; 1 of No. 77; 2 of No. 89a; 2 of No. 89b; 2 of No. 90; 2 of No. 103; 2 of No. 103b; 2 of No. 103f; 2 of No. 103g; 2 of No. 111a; 8 of No. 111c; 2 of No. 120a; 2 of No. 125; 2 of No. 126; 4 of No. 133a; 2 of No. 136; 1 of No. 160; 1 of No. 186; 1 of No. 186a; 6 of No. 188; 4 of No. 189; 2 of No. 190a; 2 of No. 192; 1 of No. 200; 2 of No. 212; 1 E1 or E120 Electric Motor.

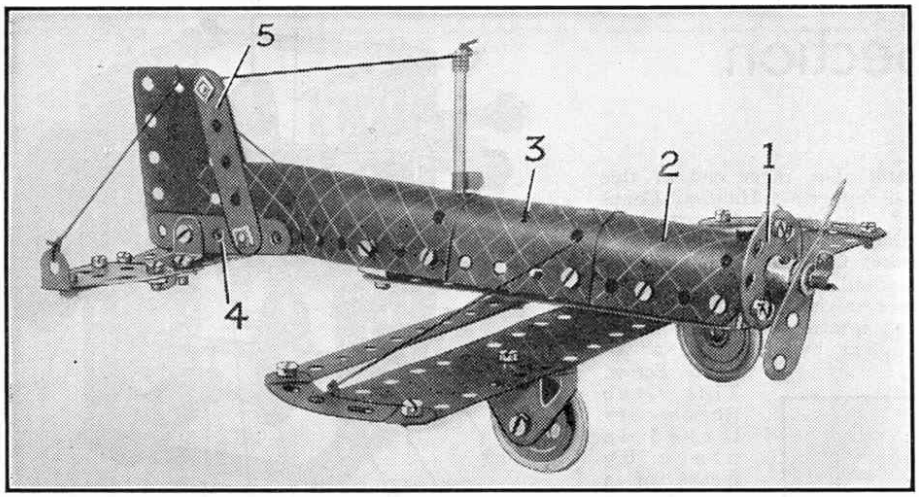

Fig. 1. A model monoplane designed for Outfit No. 2.

New Meccano Models

THE model low wing monoplane shown in Fig. 1 is assembled from parts contained in Meccano Outfit No. 2. Construction of this model is commenced by building the front of the fuselage. A Bush Wheel 1 is secured to a U-section Curved Plate 2 by three $\frac{1}{2}'' \times \frac{1}{2}''$ Angle Brackets, and the Curved Plate is then bolted to two $\frac{1}{2}'' \times \frac{1}{2}''$ Angle Brackets joined to two $5\frac{1}{2}''$ Strips.

The wings consist of two $5\frac{1}{2}'' \times 1\frac{1}{2}''$ Flexible Plates joined at their narrow ends to the $5\frac{1}{2}''$ Strips, their other ends being bolted to $2\frac{1}{2}''$ Cranked Curved Strips attached to the fuselage by two $5\frac{1}{2}''$ Strips. A Curved Plate 3 is bent as shown in the illustration, and is then bolted to the U-section Curved Plate 2.

The rudder and fin unit consists of a $2\frac{1}{2}'' \times 1\frac{1}{2}''$ Flexible Plate strengthened by $2\frac{1}{2}''$ Strips 4 and 5. The tailplane and elevators are made up of a $2\frac{1}{2}'' \times 1\frac{1}{2}''$ Flexible Plate. To one end of this a Flat Trunnion is fixed, and a similar Trunnion spaced by two Flat Brackets, is bolted to its other end. The tailskid is a $\frac{1}{2}'' \times \frac{1}{2}''$ Angle Bracket bolted to the tailplane.

Parts required to build model Aeroplane: 4 of No. 2; 5 of No. 5; 3 of No. 10; 8 of No. 12; 2 of No. 17; 2 of No. 22; 1 of No. 24; 3 of No. 35; 40 of No. 37af; 40 of No. 37bf; 2 of No. 38; 1 of No. 40; 2 of No. 48a; 2 of No. 90a; 2 of No. 111c; 2 of No. 126; 2 of No. 126a; 2 of No. 155a; 1 of No. 176; 2 of No. 188; 2 of No. 189; 1 of No. 191; 1 of No. 199; 1 of No. 200.

Owners of Outfit No. 3 will be interested in the ingenious model of an invalid chair illustrated in Fig. 2. In building this model two $2\frac{1}{2}''$ Cranked Curved Strips are attached to a $5\frac{1}{2}'' \times 2\frac{1}{2}''$ Flexible Plate 1 by means of two $\frac{1}{2}'' \times \frac{1}{2}''$ Angle Brackets 2. The other ends of the Curved Strips are secured to the ends of a $2\frac{1}{2}'' \times \frac{1}{2}''$ Double Angle Strip that is attached to the Flexible Plate. Two $2\frac{1}{2}''$ Strips 3 are also bolted to each end of the Double Angle Strip, and one of the Strips is attached at its other end to a $\frac{1}{2}'' \times \frac{1}{2}''$ Angle Bracket secured to the seat. Two $3\frac{1}{2}''$ compound strips, each consisting of two $2\frac{1}{2}''$ Strips overlapped, are bolted to the $\frac{1}{2}'' \times \frac{1}{2}''$ Angle Brackets. These Strips provide bearings for the $3\frac{1}{2}''$ Rod, and at their upper ends they carry the operating handles 6.

The rear wheel axle carries a 1″ Pulley and a Road Wheel at each end. These Pulleys are connected by means of Driving Bands to the Pulleys on the operating handles, each of which is fixed on a $\frac{3}{8}''$ Bolt by a set-screw, the bolt being journalled in the upper end hole of the $3\frac{1}{2}''$ compound strip. A Flat Bracket is secured to each of the $\frac{3}{8}''$ Bolts and similar bolts are fixed to the Flat Brackets to form handles. Two $2\frac{1}{2}''$ Cranked Curved Strips are joined to the $2\frac{1}{2}''$ Strips 3, and their lower ends are bolted to a $2\frac{1}{2}'' \times \frac{1}{2}''$ Double Angle Strip that is secured to the back of the $2\frac{1}{2}'' \times 2\frac{1}{2}''$ Flexible Plate. Two 3″ Formed Slotted Strips 7 also are joined to the Double Angle Strip and are bolted to a $\frac{1}{2}''$ Reversed Angle Bracket 8.

The front wheel is steered by means of a handle consisting of a 2″ Rod fixed by a Rod-Strip Connector to a Double Bracket, which is fixed to a second Double Bracket that in turn is mounted on a $\frac{3}{8}''$ Bolt passed through a hole in the Flat Trunnion 9. The lower Double Bracket is lock-nutted to a Cranked Bent Strip 10, in the arm of which the axle of the front wheel is journalled.

Parts required to build model Invalid Chair: 8 of No. 5; 2 of No. 10; 2 of No. 11; 4 of No. 12; 1 of No. 16; 1 of No. 17; 1 of No. 18a; 4 of No. 22; 1 of No. 24; 37 of No. 37af; 28 of No. 37bf; 3 of No. 38; 1 of No. 40; 1 of No. 44; 2 of No. 48a; 4 of No. 90a; 5 of No. 111c; 1 of No. 125; 1 of No. 126a; 2 of No. 187; 1 of No. 190; 1 of No. 192; 1 of No. 212; 1 of No. 214; 2 of No. 215.

The construction of the mobile crane shown in Fig. 3 is commenced by bolting two Angle Brackets to the front flange of a $5\frac{1}{2}'' \times 2\frac{1}{2}''$ Flanged Plate that forms the chassis. Two $2\frac{1}{2}''$ Curved Cranked Strips are bolted to these Angle Brackets to form the supports for the front wheel. A $\frac{3}{8}''$ Bolt is passed through the end holes in the $2\frac{1}{2}''$ Curved Cranked Strips and is then lock-nutted in the end hole of the flanges of two Trunnions.

The sides of the jib are held together by a 2″ Axle Rod fitted with two Spring Clips, and by a $\frac{3}{8}''$ Bolt 3. A nut is placed on this bolt to space the sides apart.

The Crank Handle journalled in the sides of the cab carries a Cord Anchoring Spring. A 3″ Rod with a 1″ Pulley at one end, and a Bush Wheel in the centre, also is journalled in the sides of the cab, where it is held in place by Spring Clips.

The Cord for raising and lowering the jib is tied to the Bush Wheel, and is then passed round the 2″ Rod and tied to the 3″ Axle Rod. The pulley block consists of two Flat Brackets bolted together with a small Loaded Hook between them. The operating cord is tied to the Cord Anchoring Spring on the Crank Handle and is then passed over the end of the jib and round the two Washers in the pulley block before it is tied to the end of the jib.

Parts required to build Mobile Crane: 4 of No. 2; 6 of No. 8; 2 of No. 10; 8 of No. 12; 2 of No. 16; 2 of No. 17; 1 of No. 19g; 4 of No. 22; 1 of No. 24; 4 of No. 35; 43 of No. 37a; 34 of No. 37b; 4 of No. 38; 1 of No. 40; 2 of No. 48a; 1 of No. 52; 1 of No. 57c; 2 of No. 90a; 3 of No. 111; 2 of No. 126a; 2 of No. 176; 2 of No. 188; 1 of No. 189; 2 of No. 190; 1 of No. 191; 1 of No. 200.

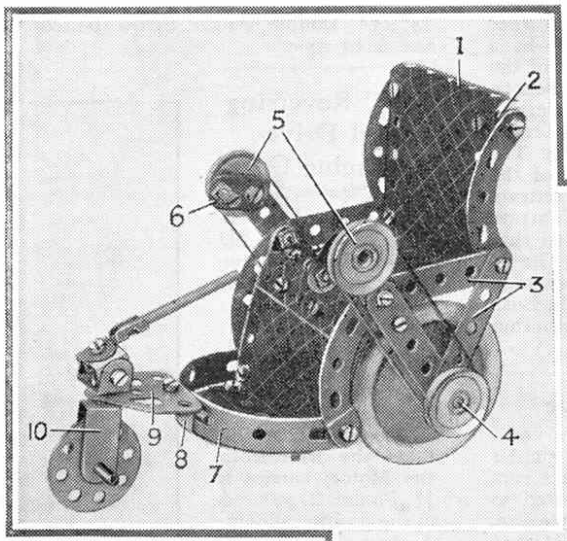

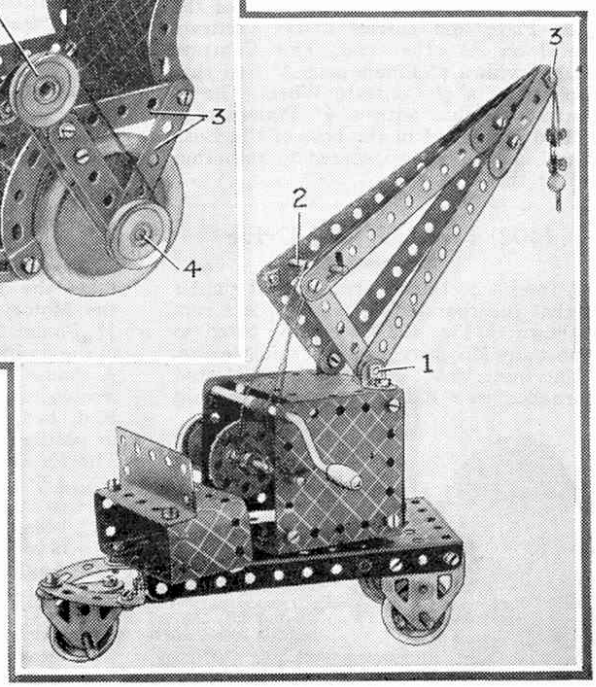

Fig. 2. Above shows a working model of an invalid chair that can be built from the parts in Outfit No. 3. Fig. 3 on the right shows a neat model mobile crane.

Suggestions Section

By "Spanner"

(491) A Model Egg Whisk

(B. T. Gillyatt, Chesterfield)

The model egg whisk shown in Fig. 491 is designed so that it may be clamped on the rim of a basin. The framework consists of a Face Plate 1 and a Bush Wheel 2, spaced apart by four $2\frac{1}{2}'' \times \frac{1}{2}''$ Double Angle Strips bent as shown. Four $3\frac{1}{2}''$ Strips are lock-nutted to the inner holes of the Face Plate, but they are spaced from it by a Washer and a Nut. The other ends of the Strips are bolted to $\frac{1}{2}'' \times \frac{1}{2}''$ Angle Brackets.

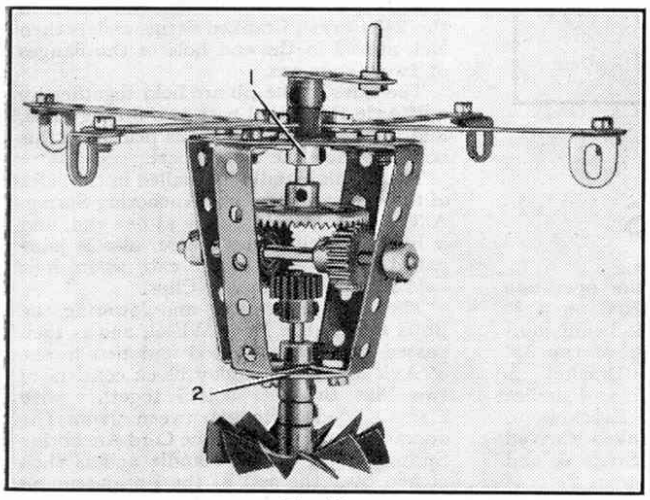

Fig. 491.

The handle is constructed by inserting a $1\frac{1}{2}''$ Rod firmly in the boss of a Crank, to which is secured a Threaded Pin. The $1\frac{1}{2}''$ Rod is journalled in the boss of the Face Plate and carries a $1\frac{1}{2}''$ Contrate Wheel on its other end. This Contrate meshes with a $\frac{3}{4}''$ Pinion on a 3″ Rod that also carries a $\frac{3}{4}''$ Contrate Wheel. The $\frac{3}{4}''$ Contrate meshes with a $\frac{1}{2}''$ Pinion on a 2″ Rod journalled in the boss of the Bush Wheel, and a Fan is secured to the other end of this Rod.

(492) Front Wheel Drive

("Spanner")

A front wheel drive arrangement similar to that incorporated in many sports cars is shown in Fig. 492. It can be fitted to almost any Meccano chassis of suitable size.

The front wheel is carried on a 1″ Rod journalled in the boss of a Double Arm Crank. The inner end of this Rod supports a Handrail Coupling, the rounded portion of which fits into one end of a Socket Coupling. Although the Handrail Coupling is free to move universally, it is prevented from rotating from the Socket Coupling by means of a $\frac{7}{32}''$ Grub Screw. This Grub Screw is locked in place by means of a $\frac{5}{32}''$ Grub Screw screwed into the opposite hole of the Handrail Support, and the portion of the long Grub Screw that projects engages with the slot in the Socket Coupling.

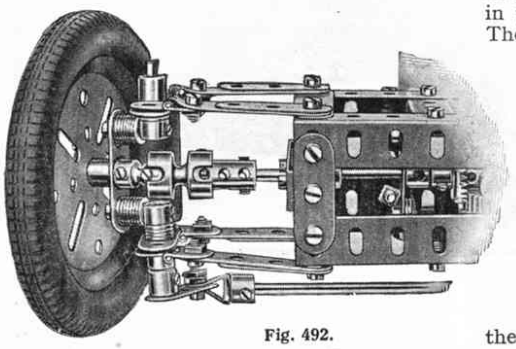

Fig. 492.

The opposite end of the Socket Coupling carries a Coupling by means of which the drive from the differential is transmitted through a Rod of suitable length to this part of the movement. The Rod is journalled in $1\frac{1}{2}'' \times \frac{1}{2}''$ Double Angle Strips bolted to the front axle.

(493) Reversing and Drive-Changing Gear

("Spanner")

The mechanism shown in Fig. 493 allows two or three different operations to be controlled from a single driving shaft separately or simultaneously, and in the forward or reverse direction.

The Rod 1, which takes the drive from the Motor, carries a $\frac{3}{4}''$ Pinion 2 secured in the position shown. A similar Pinion 3 is free to rotate on the Rod, but is retained in position by a Collar and Set Screw 4. The Pinions engage with opposite sides of a $\frac{3}{4}''$ Contrate Wheel 5, which is free to turn on a short Rod fixed in the boss of a Bush Wheel 6. This wheel is bolted rigidly to the $2\frac{1}{2}'' \times \frac{1}{2}''$ Double Angle Strip that connects the side Plates of the gear box.

The secondary Rods 7 and 8 are slideable in their bearings and their movements may be controlled by levers 9. Each Rod carries a 50-teeth Gear Wheel 10, and on operation of its respective lever this Gear may be made to engage with one or other of the Pinions 2 or 3 or it may be placed in neutral, that is, in a central position.

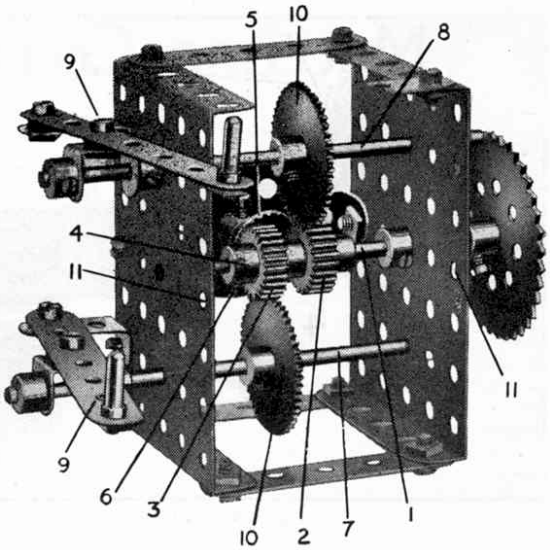

Fig. 493.

A third shaft can be journalled in the holes 11 of the side Plates and controlled from the driving shaft 1 in exactly the same way. The gear-box, therefore, enables the shafts 7 and 8 and the shaft journalled in the holes 11 to be driven simultaneously or separately from the single driving Rod 1.

(494) Electro-Magnetic Ratchet Feed

(J. Blacklin, Liverpool)

Electro-magnetic ratchet feed mechanisms fulfil an important part in the working of automatic traffic lights, and are also used extensively in automatic telephones for operating rotary switching devices. Fig. 494 shows an electro-magnetic ratchet feed built in Meccano.

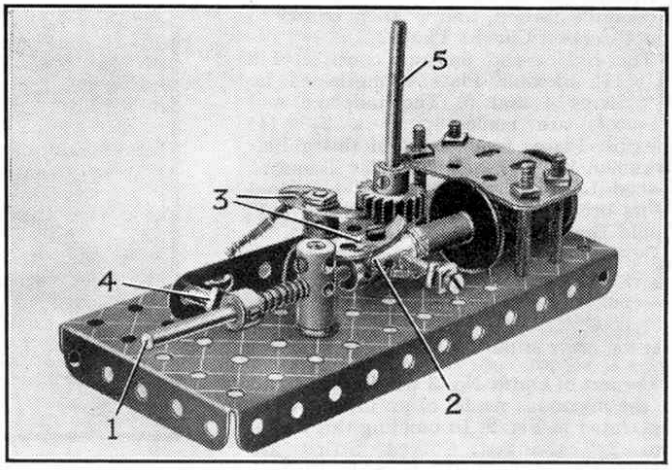

Fig. 494.

The base of the mechanism is a Flanged Plate, to one end of which an Elektron Solenoid is clamped by Flat Girders and $1\frac{1}{2}''$ Screwed Rods. A 3″ Axle Rod 1 is connected to the Solenoid core by a Coupling 2, the other end of the Rod being journalled in a Threaded Coupling. A Compression Spring is placed on the Rod and is locked in position by a Collar, on one side of which is screwed a Threaded Pin 4 that slides in the slot of a 2″ Slotted Strip mounted on the base. One of the Pawls is mounted on a 1″ Threaded Rod, and the other on the Coupling 2.

New Meccano Models

Conveyor—Gun—Helve Hammer

CONSTRUCTION of the model conveyor shown in Fig. 3 should be commenced by building the rear end of the boom that supports the conveyor. This consists of two 12½″ Strips 1 bolted to the flanges of a 5½″×2½″ Flanged Plate so that they overlap 1½″ at one end. A Semi-Circular Plate is bolted to the rear end of each 12½″ Strip to provide bearings for a 3½″ Rod 3, which carries two 1″ Pulleys fitted with Rubber Rings. A 5½″×2½″ Flexible Plate 4 is attached to the 5½″×2½″ Flanged Plate and to the Strips 1 by a 2½″×½″ Double Angle Strip.

The travelling wheels are fixed on a 3½″ Rod. The front portion of the boom is hinged and consists of two 12½″ Strips 5 lock-nutted to the Strips 1 by Bolts 6. A Magic Motor is bolted to Strips 5 by ½″ Reversed Angle Brackets. Two 4½″×2½″ and a 5½″×2½″ Flexible Plate fill in the boom.

A 3½″ Rod 7 is journalled in the outer end holes of the boom, and it carries two 1″ Pulleys fitted with Rubber Rings and a 1″ Pulley that is connected by Cord to the driving pulley of the "Magic" Motor. The conveyor belt, which is an endless band of paper about 2″ wide, is passed over the 1″ Pulleys fitted with Rubber Rings and is held in place by idlers formed from 3″ Formed Slotted Strips. A 3½″ Rod 8, journalled in the 12½″ Strips 5 and held by Spring Clips, forms a guide for the lower half of the conveyor belt.

The hinged portion of the boom is raised or lowered by turning the 3½″ Crank Handle 9, which operates two lengths of Cord attached to a Cord Anchoring Spring on the Handle and arranged as shown.

The conveyor is tensioned by a 2½″ Strip that is joined at each end to a 2½″ Strip 10 by ½″×½″ Angle Brackets. These Strips are lock-nutted to the Strips 5, and are joined by Cord to a 6″ Driving Band 11, which is also attached by a Nut and Bolt to the "Magic" Motor. The conveyor is maintained at the desired angle by a ratchet device constructed from a 2½″ Strip 12 bolted to a Double Bracket. One arm of the Double Bracket engages a Spring Clip on the Crank Handle, and its other arm is bolted to a ½″×½″ Angle Bracket lock-nutted to the chassis.

Parts required to build model portable conveyor: 4 of No. 1; 4 of No. 2; 8 of No. 5; 1 of No. 11; 8 of No. 12; 4 of No. 16; 1 of No. 19g; 5 of No. 22; 1 of No. 23; 7 of No. 35; 81 of No. 37af; 71 of No. 37bf; 7 of No. 38; 1 of No. 40; 6 of No. 48a; 1 of No. 51; 1 of No. 52; 2 of No. 54a; 1 of No. 90a; 4 of No. 111c; 2 of No. 125; 2 of No. 126a; 4 of No. 155a; 1 of No. 176; 1 of No. 186; 2 of No. 187; 2 of No. 189; 2 of No. 191; 2 of No. 192; 1 of No. 200; 2 of No. 214; 4 of No. 215; 2 of No. 217b; 1 Magic Motor (not included in Outfit).

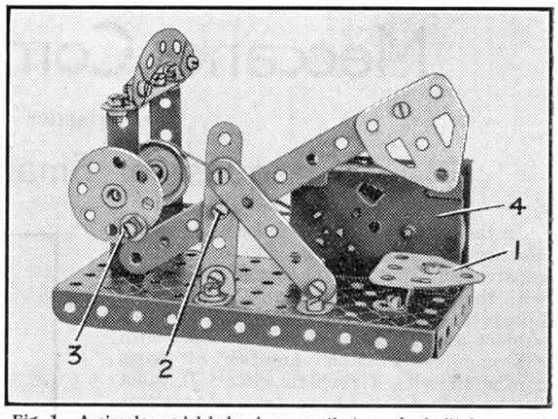

Fig. 1. A simple model helve hammer that can be built from parts in Outfit No. 2.

In Fig. 1 is shown a simple model of a helve hammer that can be built from the contents of Outfit No. 2 The anvil 1 is built up from a Reversed Angle Bracket and a Flat Trunnion. The shaft of the hammer is a 5½″ Strip, and the head is a Flat Trunnion. The shaft is pivoted in the fourth hole from its rear end on a Bolt 2, which is pushed through a 2½″ Strip fixed by an Angle Bracket to the base, and is made rigid by a further 2½″ Strip attached to it and the base, as shown.

The operating mechanism consists of a Bush Wheel fitted with a ⅜″ Bolt 3 in one of its holes. Two Washers and a Nut are placed on the shank of the Bolt on the face side of the Bush Wheel, which is fixed to a 2″ Rod that carries a 1″ fast Pulley and is journalled in the centre holes of two 2½″×½″ Double Angle Strips.

The driving pulley of a "Magic" Motor 4 is connected to the 1″ Pulley by means of a Driving Band.

Parts required to build model Helve Hammer: 1 of No. 2; 3 of No. 5; 4 of No. 12; 1 of No. 22; 1 of No. 24; 23 of No. 37a; 20 of No. 37b; 3 of No. 38; 2 of No. 48a; 1 of No. 52; 1 of No. 90a; 1 of No. 111c; 1 of No. 125; 2 of No. 126, 1 Magic Motor (not included in Outfit).

The gun shown in Fig. 2 fires bullets consisting of Couplings. It is easy to build and its construction is commenced by assembling the supports for the barrel, details of which can be seen in the illustration. The barrel 1 is joined to a Rod 5 by two Couplings 3 and 4 fixed in the positions shown. The Coupling 4 forms the butt of the gun, and the Coupling 3 provides a bearing for a 1⅛″ Bolt 6, on which the trigger, a Boss Bell Crank 7, is freely mounted. The bullets are fired by means of a spring-activated Coupling 2, which is free to slide along the barrel. To load the gun this Coupling is pulled backwards until it is gripped by the Coupling 8, which is mounted on a 1⅛″ Bolt lock-nutted to the Boss Bell Crank 7. A Spring 10 pulls the Coupling 2 sharply back to its original position when the trigger 7 is released. The trigger is reset by a Spring 9, which is attached to the Coupling 8 and to the Rod on which the 1″ Pulley is mounted.

Bearings for this Rod are provided by the Architraves, which are bolted to Flanged Brackets and the 5½″×2½″ Flanged Plate forming the base of the model, by two 1½″×½″ Double Angle Strips. These Architraves and Flanged Brackets are joined at their upper ends by means of a 2″ Screwed Rod. A Coupling is lock-nutted on the 2″ Screwed Rod carrying the 1″ Pulley and the Rod 5 is gripped in its end transverse bore by a Grub Screw. The barrel of the gun may be raised or lowered to the desired angle by either turning the 1″ Pulley or by moving the butt up and down.

A great deal of fun may be obtained by using the gun in a miniature shooting gallery.

Parts required to make novel gun: 4 of No. 12; 1 of No. 14; 1 of No. 15; 1 of No. 18b; 1 of No. 22; 26 of No. 37af; 17 of No. 37bf; 2 of No. 38; 2 of No. 43; 1 of No. 52; 1 of No. 59; 6 of No. 63; 2 of No. 81; 2 of No. 108; 2 of No. 111d; 2 of No. 115; 1 of No. 128; 1 of No. 139; 1 of No. 139a.

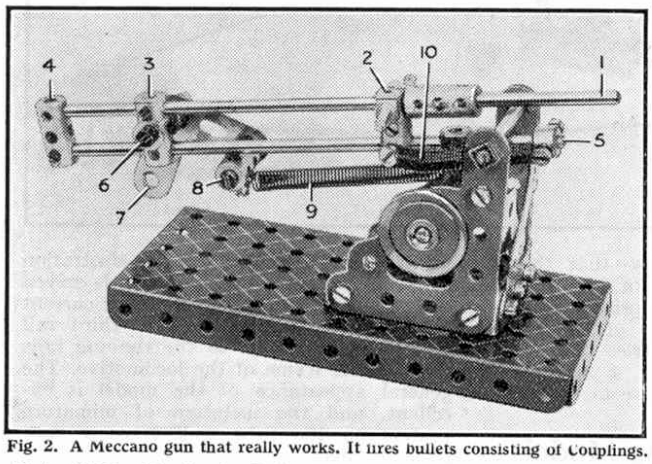

Fig. 2. A Meccano gun that really works. It fires bullets consisting of Couplings.

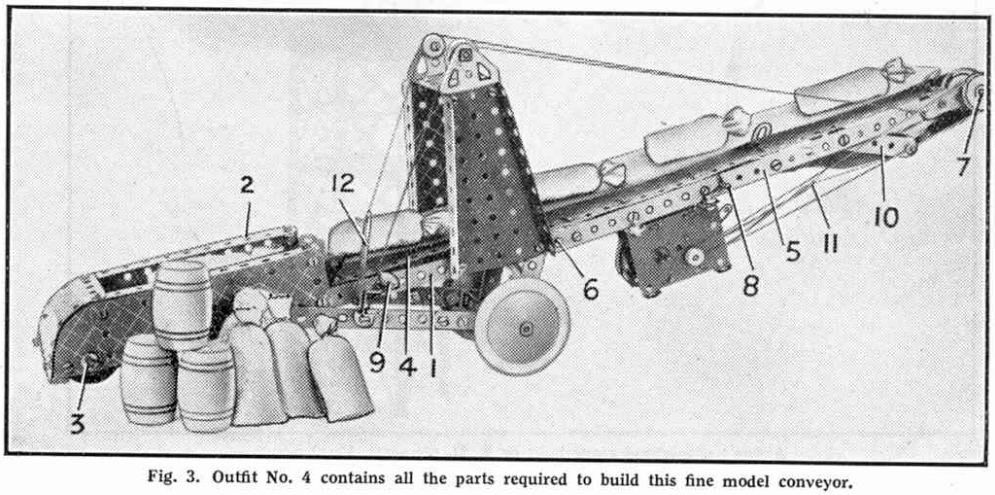

Fig. 3. Outfit No. 4 contains all the parts required to build this fine model conveyor.

A New Super-Model Mobile Crane

Castor Steering and Electric Drive

MANY devices have been invented in an endeavour to solve the problem of high speed handling and transportation of materials and merchandise. One of the most popular and interesting of these is the mobile crane that forms the subject of the fine Meccano model shown in Fig. 1. The actual crane is entirely self-contained, with its own power unit, and combines the stability and efficiency of a stationary crane with extreme mobility. Its travel is not confined to a set of rails, or hindered by trailing cables from an external power supply, so that it can be used for transporting goods over a wide area.

The power unit in the model is an Electric Motor, and the luffing, hoisting and travelling operations can each be brought into play by the movement of levers within easy reach of the operator. The crane is slewed by rotation of a pivoted rear castor controlled from the operator's cab.

Construction of the model should be commenced by building the chassis. This consists of two channel section girders 1, Fig. 2, formed from two 9½″ Angle Girders. These are bridged by two 3½″ Angle Girders, and are connected at their rear ends by a 4½″ Angle Girder, to which is bolted a 4½″ Flat Girder and two 4½″ × 2½″ Flat Plates 3.

The front axle 4 is journalled in Handrail Supports secured to built up semi-elliptic springs attached to the chassis, and it carries two 2″ Pulleys fitted with Tyres. The front of the driving cab is a 4½″×2½″ Flexible Plate bent as shown and attached to the ends of the girders 1 by two 3″ Formed Slotted Strips. At its upper corners it is bolted to 2½″×2½″ Flat Plates fixed to the girders 1 by Obtuse Angle Brackets.

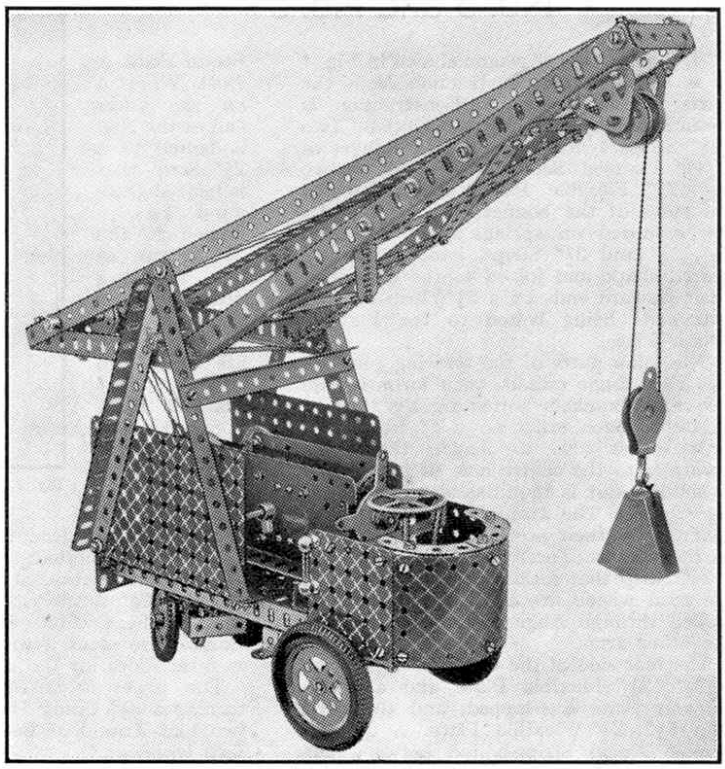

Fig. 1. A general view of the new Super Model Electric Mobile Crane.

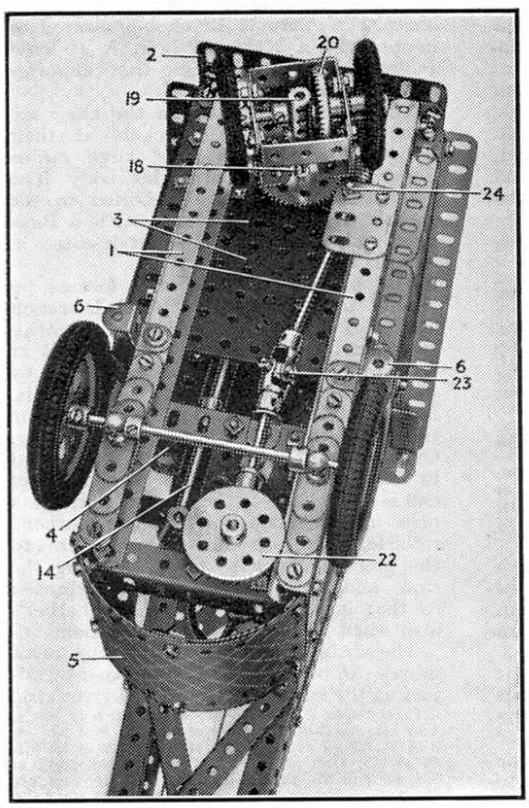

Fig. 2. An underneath view of the Electric Mobile Crane, showing the castor and steering mechanism.

An E6 or E20B Electric Motor is attached to one of the 3½″ Angle Girders at the forward end of the chassis by ½″×½″ Angle Brackets, and its sideplates are extended by two 2½″×2½″ Flat Plates that are secured to them by two 1″ Corner Brackets but are spaced from them by Washers. The 2½″×2½″ Flat Plates are bolted to two 2½″ Angle Girders fixed to the Flat Plates 3.

A Worm on the armature shaft of the Motor meshes with a ½″ Pinion 8 mounted on a 2″ Rod that carries a ⅞″ Bevel Gear and a Collar. This Rod is journalled in a Channel Bearing 9 bolted to one of the Motor sideplates. The Bevel drives a similar Bevel mounted on a 2½″ Rod that carries also a ½″ diam. ½″ face Pinion 10. The Pinion is in constant mesh with a 57-teeth Gear 11 on a 2½″ Rod, which also carries a ¾″ Pinion 12, Fig. 4, and two Collars. This Rod forms the layshaft and can be moved sideways in its bearings by moving the control lever 13, Fig. 3. The latter is a 2″ Rod inserted in a Coupling attached to one end of an 8″ Rod 14, which carries at its rear end a Crank 15. A ⅜″ Bolt is fixed in the end hole of the Crank and its head engages between a Collar on the layshaft and the Pinion 12.

At this point it is advisable to assemble the automatic brake that maintains the load when the drive is transferred to operate the other movements of the crane. On the left-hand end of the layshaft is a Collar, and when the layshaft is moved the Collar pushes against the end of a 1″ Rod that is fixed in a Coupling held on a 2″ horizontal Rod 17. The 1″ Rod is kept in close contact with the Collar on the layshaft by a short length of Spring

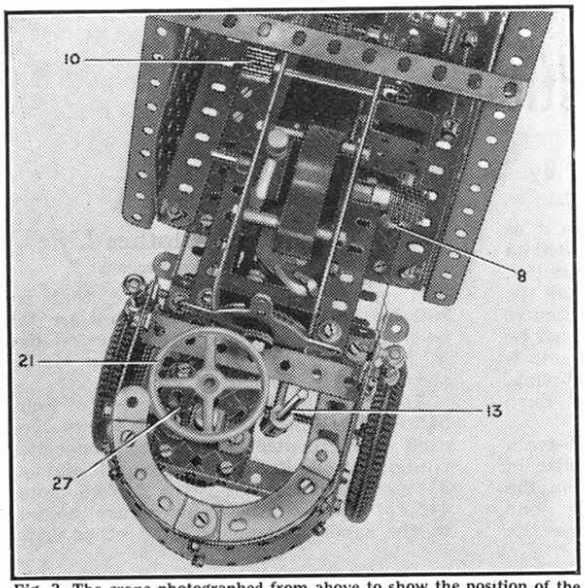

Fig. 3. The crane photographed from above to show the position of the Electric Motor and the control lever.

Cord. Rod 17 is journalled in a $1\frac{1}{2}'' \times \frac{1}{2}''$ Double Angle Strip bolted to the chassis, and is retained loosely in place by Collars at each end. The brake band is a belt of Cord, which passes around a Bolt and around a 1″ Pulley on a $2\frac{1}{2}''$ Rod that carries also a 50-teeth Gear 16 and a Cord Anchoring Spring.

The castor unit and its gears are constructed as follows. Two $1\frac{1}{2}'' \times \frac{1}{2}''$ Double Angle Strips and two $1\frac{1}{2}''$ Flat Girders are bolted together to form a cage as shown in Fig. 2. Two $1\frac{1}{2}''$ Angle Girders are then bolted to the Flat Girders, and they in turn are attached by means of two $\frac{3}{4}''$ Bolts to a 57-teeth Gear mounted on a Rod 18. The Angle Girders are spaced from the Gear by the length of the Bolts. The lower end of Rod 18 is inserted in the longitudinal bore of a Coupling 19, which is mounted on a $2\frac{1}{2}''$ Rod pushed through its centre transverse bore. Rod 18 carries also a $\frac{1}{2}''$ Pinion that meshes with a $1\frac{1}{2}''$ Contrate 20 on the Rod of Coupling 19. At its upper end Rod 18 carries a $\frac{3}{4}''$ Contrate and is journalled in the Flat Plate of the chassis and a $1\frac{1}{2}'' \times \frac{1}{2}''$ Double Angle Strip bolted above the Plate.

The castor is steered from the operator's cab. The Steering Wheel 21 is fixed on a $3\frac{1}{2}''$ Rod journalled in a $3'' \times 1\frac{1}{2}''$ Flat Plate bolted to the chassis framework and in a Double Bent Strip bolted above the Plate. A $1\frac{1}{2}''$ Bevel mounted on the lower end of this Rod meshes with a $\frac{1}{2}''$ Bevel fixed on a 2″ Rod journalled in $\frac{1}{2}'' \times \frac{1}{2}''$ Angle Brackets, and is connected to a 4″ Rod by a Universal Coupling 23. A Worm on the rear end of the 4″ Rod meshes with the 57-teeth Gear of the castor unit, and a bearing for this Rod is provided by a Handrail Support 24.

The Pinion 12 on the layshaft meshes with a 50-teeth Gear mounted on a 2″ Rod 25 that carries also two Cord Anchoring Springs. A 2″ Rod 26 carries two 1″ Pulleys, over which the cord for raising and lowering the jib is passed, and also a Flat Bracket that is free to pivot and is held in place by Collars. The shaft 25 is controlled by a foot-brake that consists of a length of cord fastened at one end to the side of the gear-box, then passed around a 1″ Pulley fixed on the Rod 25 and finally tied to a foot pedal 27 in the cab. This foot pedal is made up of a Flat Bracket bolted to the centre hole of a Double Bracket, which in turn is pivoted on a Double Bracket fixed to the floor of the cab. The brake cord is attached to the rear of the Flat Bracket.

Each side of the body is a $5\frac{1}{2}'' \times 3\frac{1}{2}''$ Flat Plate bolted to $5\frac{1}{2}''$ Angle Girders fixed to the girders 1. Two $7\frac{1}{2}''$ Angle Girders are arranged to form an "A" frame, as shown, and at their upper ends are bolted to the end hole in the arm of a Crank.

The construction of the jib is quite simple and its details are clear from the illustrations. The jib head pulleys are mounted on a $1\frac{1}{2}''$ Rod journalled in Trunnions A 5″ Rod 28 journalled at the rear end of the jib carries four 1″ loose Pulleys spaced from each other by Collars. Two Flat Brackets are placed on the Rod between the Collars and the outer Pulleys.

The cord for raising and lowering the load is fastened to a Cord Anchoring Spring on the Rod of Gear 16 and then passed around the two centre Pulleys on the Rod 28, over the jib head Pulleys and around the Pulley of the Single Sheave Pulley Block. Finally the cord is tied to the Flat Bracket on the Rod 26.

Two equal lengths of cord for raising and lowering the jib are fastened at one of their ends to the Cord Anchoring Springs on the Rod 25, and are then passed around the outer 1″ Pulleys on the Rod 28 and around the 1″ Pulleys on the Rod 26. Their other ends are fastened to the Flat Bracket mounted on the Rod 28.

This completes the assembly of the model, but before it is set in operation it is advisable to oil the gearing and bearings, and to see that all the Rods run freely.

Parts required to build model electric mobile crane: 4 of No. 2; 2 of No. 2a; 3 of No. 3; 3 of No. 5; 2 of No. 6a; 2 of No. 7a; 6 of No. 8a; 5 of No. 9; 2 of No. 9a; 2 of No. 9b; 2 of No. 9d; 1 of No. 9e; 2 of No. 9f; 4 of No. 10; 2 of No. 11; 8 of No. 12; 2 of No. 12c; 1 of No. 13a; 2 of No. 15; 1 of No. 15a; 1 of No. 15b; 1 of No. 16; 5 of No. 16a; 6 of No. 17; 1 of No. 18a; 3 of No. 18b; 2 of No. 20a; 2 of No. 21; 4 of No. 22; 6 of No. 22a; 1 of No. 25; 2 of No. 26; 1 of No. 26a; 2 of No. 27; 2 of No. 27a; 1 of No. 28; 1 of No. 29; 2 of No. 30; 1 of No. 30a; 1 of No. 30c; 2 of No. 32; 156 of No. 37;af 136 of No. 37bf; 63 of No. 38; 1 of No. 40; 1 of No. 45; 4 of No. 48; 1 of No. 48b; 2 of No. 52a; 2 of No. 53a; 3″ of No. 58; 1 of No. 58b; 28 of No. 59; 3 of No. 62; 3 of No. 63; 4 of No. 72; 1 of No. 73; 1 of No. 82; 2 of No. 90a; 1 of No. 103c; 2 of No. 103f; 3 of No. 103h; 2 of No. 111; 4 of No. 111c; 2 of No. 125; 2 of No. 126; 2 of No. 133a; 7 of No. 136; 1 of No. 140; 2 of No. 142a; 2 of No. 142d; 1 of No. 151; 1 of No. 160; 3 of No. 176; 1 of No. 185; 1 of No. 191; 2 of No. 215. 1 E20B or E6 Electric Motor.

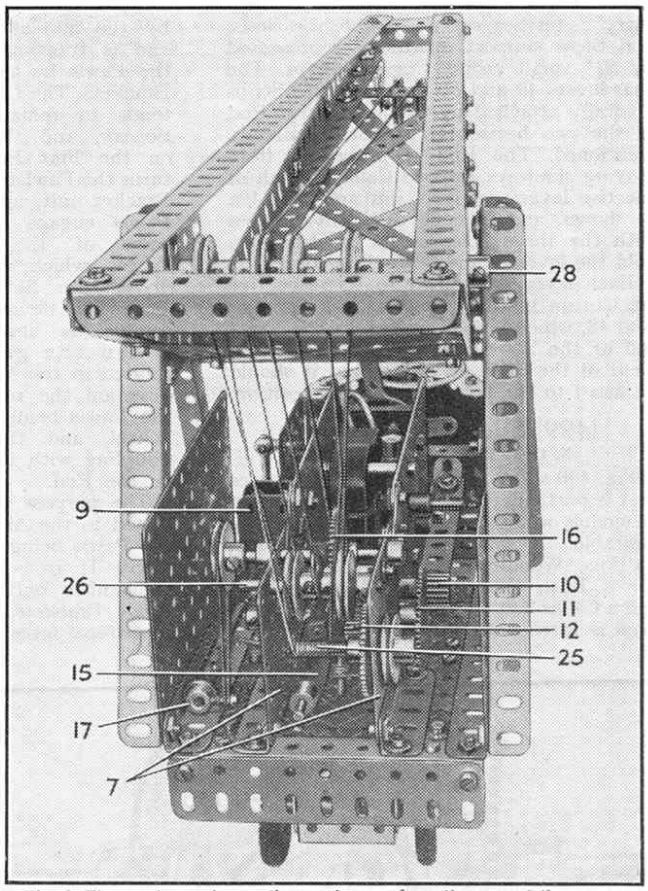

Fig. 4. The gearing and operating cords seen from the rear of the crane.

New Meccano Models

A Dumper Car and Cargo Boat

WHEN stone, gravel and similar materials have to be transported over short distances, as on construction sites, a dumper is sometimes used for the work. The advantages of such a vehicle over a lorry are that it is able to travel rapidly over rough ground and is more easily manœuvred. A miniature dumper that can be built from parts in Outfit No. 3 is shown in Fig. 1 on this page. This is a splendid working model to build, and it is designed so that it may be used in conjunction with a Meccano model crane or a conveyor to provide real fun.

The chassis is the first part of the model to build. The longer flanges of a $5\frac{1}{2}'' \times 2\frac{1}{2}''$ Flanged Plate 1 are extended 1″ by two $2\frac{1}{2}''$ Strips and two $2\frac{1}{2}''$ Cranked Curved Strips. The free ends of these Strips are joined to a $2\frac{1}{2}'' \times \frac{1}{2}''$ Double Angle Strip at the rear end of the model. A seat for the driver is formed from a $5\frac{1}{2}'' \times 1\frac{1}{2}''$ Flexible Plate 2, to which a similar Plate 3 is attached by a $\frac{1}{2}'' \times \frac{1}{2}''$ Angle Bracket.

A *Magic* Motor 4 is attached to the Plate 1 and also to the left-hand $2\frac{1}{2}''$ Strips by a $\frac{1}{2}'' \times \frac{1}{2}''$ Angle Bracket.

A lever 5 for starting and stopping the Motor is constructed by fixing a $\frac{1}{2}''$ Reversed Angle Bracket to the control lever of the Motor. A $2\frac{1}{2}''$ Strip is lock-nutted in the elongated hole of this Reversed Angle Bracket and it is pivoted by its centre hole on a bolt fixed in the Motor sideplates.

The steering column is journalled in the chassis and in a $\frac{1}{2}''$ Reversed Angle Bracket. It carries a Spring Clip, which prevents the rear wheels from swivelling when there is no control on the steering wheel, and on its lower end it has a Cord Anchoring Spring. Cord is fastened at its centre to the Cord Anchoring Spring, and one half of it is wrapped several turns in a clockwise direction around the Spring, while the other half is wrapped in an anti-clockwise direction, the ends of the Cord being tied to the rear castor.

The front axle carries two 1″ Pulleys, one of which is connected by a belt of Cord to the pulley on the *Magic* Motor, the other forming a drum for an external contracting band brake. A length of Cord is passed around the Pulley and one of its ends is tied to the chassis, while the other is tied to a $2\frac{1}{2}''$ Cranked Curved Strip 6 lock-nutted to one arm of a Double Bracket bolted to the Plate 1. A Rod and Strip Connector is pivoted to the other arm of the Double Bracket, and a $1\frac{1}{2}''$ Rod held in it forms a lever 7 for tipping the container.

The container is pivoted on a 4″ compound rod passed through two Flat Brackets bolted to its base and two Flat Trunnions bolted to the chassis. A length of Cord is fastened to the forward end of the container and is passed around a $\frac{1}{2}''$ loose Pulley lock-nutted to one arm of a Cranked Bent Strip bolted to the chassis, its other end being secured to the tipping lever 7 by a Spring Clip. After tipping, the container is pulled back to its original position by a $2\frac{1}{2}''$ Driving Band tied to its rear end and to a Double Bracket bolted to the chassis.

Parts required to build model dumper: 2 of No. 2; 9 of No. 5; 5 of No. 10; 2 of No. 11; 8 of No. 12; 2 of No. 16; 2 of No. 17; 1 of No. 18a; 4 of No. 22; 1 of No. 23; 1 of No. 24; 6 of No. 35; 56 of No. 37a; 48 of No. 37b; 6 of No. 38; 1 of No. 44; 1 of No. 48a; 1 of No. 52; 3 of No. 90a; 4 of No. 111c; 2 of No. 125; 2 of No. 126; 2 of No. 126a; 2 of No. 155a; 1 of No. 176; 1 of No. 186; 2 of No. 187; 1 of No. 188; 2 of No. 189; 2 of No. 192; 1 of No. 199; 1 of No. 212; 1 of No. 213; 1 *Magic* Motor.

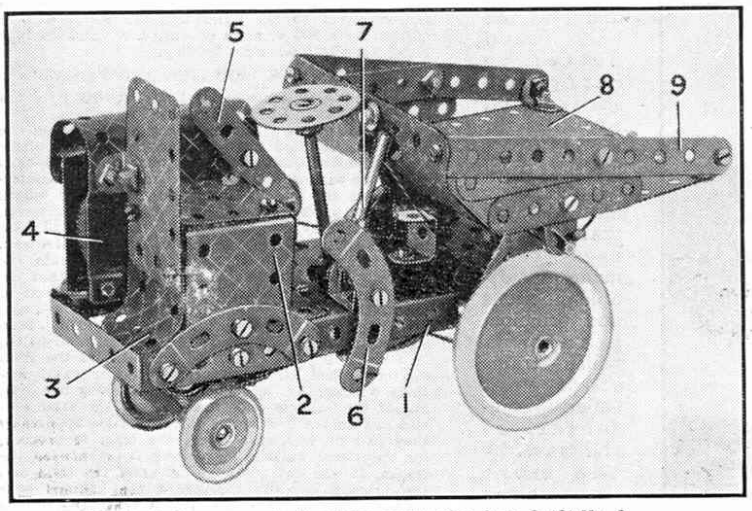

Fig. 1. A dumper car designed for construction from Outfit No. 3.

The model shown in Fig. 2 is a reproduction of a small tramp steamer of the type used in coastal trade. Its construction is commenced by building the hull, details of which are clear from the illustration.

The forward hold is covered by two $2\frac{1}{2}''$ Flat Girders 1 hinged to 3″ Strips edging the opening in the deck. The rear ends of the Strips are bolted to a $3\frac{1}{2}''$ Strip to which two $2\frac{1}{2}''$ Curved Strips are attached. The inner edges of the Curved Strips lie against the curved front of the bridge, which is built as follows. A $2\frac{1}{2}'' \times 2\frac{1}{2}''$ Flat Plate 2 is edged on three sides with a $5\frac{1}{2}'' \times 1\frac{1}{2}''$ and a $2\frac{1}{2}'' \times 1\frac{1}{2}''$ Flexible Plate. The ends of these are bridged by two 3″ Formed Slotted Strips forming the front.

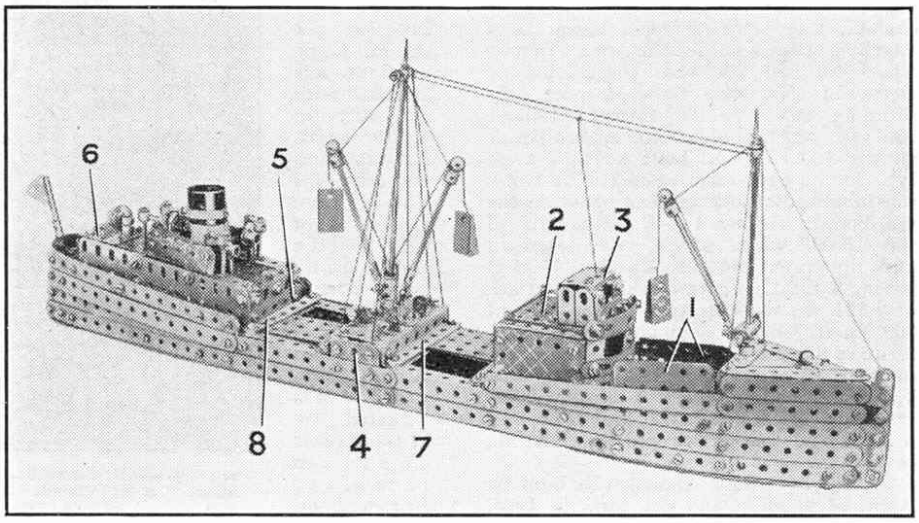

Fig. 2. A sturdy and realistic model cargo boat. It has three holds, each fitted with a removable hatch.

The wheelhouse 3 and the complete bridge structure are fixed by $\frac{1}{2}'' \times \frac{1}{2}''$ Angle Brackets to a $3\frac{1}{2}'' \times 2\frac{1}{2}''$ Flanged Plate bolted between the sides of the ship.

The after-deck consists of two $5\frac{1}{2}''$ Strips bolted at their forward ends to a $3\frac{1}{2}'' \times 1\frac{1}{2}''$ compound flexible plate secured in position by a $3\frac{1}{2}''$ Angle Girder and Angle Brackets. The rear ends of the $5\frac{1}{2}''$ Strips are bolted to a $1\frac{1}{2}''$ Corner Bracket that carries two Flat Brackets. A $2\frac{1}{2}''$ Flat Girder 5 is secured to Angle Brackets bolted to the after-deck, and a $6\frac{1}{2}''$ compound flat girder consisting of a $4\frac{1}{2}''$ and a $2\frac{1}{2}''$ Flat Girder overlapped, are attached to each side of it. The rear ends of the compound flat girders are joined to a $1\frac{1}{2}''$ Flat Girder. Each lug of a Raked Ships' Funnel is bent at a right-angle and then bolted by a $\frac{3}{8}''$ Bolt to the compound flat girders. A Threaded Boss is secured to the Flat Girder 5.

The boat deck is a $6\frac{1}{2}'' \times 1\frac{1}{2}''$ compound flexible plate 6 consisting of a $5\frac{1}{2}'' \times 1\frac{1}{2}''$ and a $2\frac{1}{2}'' \times 1\frac{1}{2}''$ Flexible Plate joined together by two Threaded Pins. This is bolted at the after end to a $1\frac{1}{2}''$ Angle Girder attached to the $1\frac{1}{2}''$ Flat Girder.

Parts required to build model cargo boat: 8 of No. 1; 2 of No. 1a; 6 of No. 1b; 4 of No. 2; 2 of No. 2a; 15 of No. 3; 7 of No. 4; 5 of No. 5; 5 of No. 6; 11 of No. 6a; 2 of No. 8; 7 of No. 9b; 1 of No. 9f; 10 of No. 10; 2 of No. 11; 70 of No. 12; 2 of No. 12a; 4 of No. 12b; 12 of No. 12c; 3 of No. 16; 1 of No. 16b; 1 of No. 17; 1 of No. 18b; 302 of No. 37a; 260 of No. 37b; 61 of No. 38; 1 of No. 40; 1 of No. 53; 8 of No. 59; 3 of No. 62b; 1 of No. 63; 1 of No. 64; 2 of No. 69; 1 of No. 72; 1 of No. 73; 2 of No. 77; 4 of No. 81; 2 of No. 89; 2 of No. 90; 1 of No. 90a; 2 of No. 103c; 5 of No. 103f; 3 of No. 103h; 7 of No. 111a; 14 of No. 111c; 7 of No. 114; 2 of No. 115; 1 of No. 116a; 2 of No. 120a; 1 of No. 133; 1 of No. 133a; 1 of No. 136; 3 of No. 136a; 1 of No. 138; 2 of No. 176; 10 of No. 188; 2 of No. 189; 1 of No. 190a; 1 of No. 192; 2 of No. 197; 6 of No. 212; 3 of No. 213; 2 of No. 214; 7 of No. 215; 3 of No. 217b; 2 of No. A1083; 1 short length of thin wire.