New Meccano Model

Novel Wool Balling Machine

AMONG the hundreds of ingenious and novel subjects represented in the entries for the International Model-Building Competition, 1952-3, were several wool-winding devices. One of these was built by R. Luttmer, Wookey Hole, Somerset, who was one of the prize-winners, and we have taken this as the basis for our new model this month. Our model differs in some respects from that built by Luttmer, but it operates on the same principle.

Most model-builders will be familiar with the skeins in which knitting wool is usually supplied, and which have to be wound into balls before they can be used. Winding the wool by hand is a tedious process, especially when there are several skeins to be dealt with, and the machine described in this article is designed to carry out the job neatly and speedily. The skein of wool is held on a separate device, details of which are also given in this article.

The model illustrated is fitted with a convenient handle for hand operation, but it is quite a simple matter to arrange the mechanism so that it can be driven by an Electric Motor fitted with suitable reduction gearing. There is sufficient space inside the base of the machine to house an E020 or an E20R Electric Motor, whichever is available to the builder, and the Motor can be connected to the main driving shaft of the model by Sprocket Wheels and Chain.

The base of the machine consists of two 12½″×2½″ Strip Plates edged by 12½″ Angle Girders and connected at each end by 5½″×2½″ Flanged Plates. Two supports 1, each made from two 5½″ Strips placed face-to-face, and two 5½″ Angle Girders 2, are bolted across the top of the base as shown. Two vertical 2½″ Angle Girders are fixed to each of the Girders 2, and the top ends of the 2½″ Girders are connected by two 5½″ and two 2½″ Strips. A 3½″×2½″ Flanged Plate 3 is bolted to each 5½″ Strip and the Flanged Plates are connected by 2½″ Strips attached to their flanges.

A cage 4 is made by passing two 3½″ Screwed Rods through holes in two 1½″ Pulleys, which are then fixed on the Screwed Rods by nuts. Two face-to-face 7½″ Strips 5 also are fixed on the Screwed Rods by nuts, and at one end the Strips 5 are extended by four Formed Slotted Strips. The Formed Slotted Strips are arranged in pairs and overlapped to form a semi-circular strip 6 of double thickness. At their other ends the Strips 5 are fitted with a counter-balance weight formed by four Flat Trunnions bolted in position.

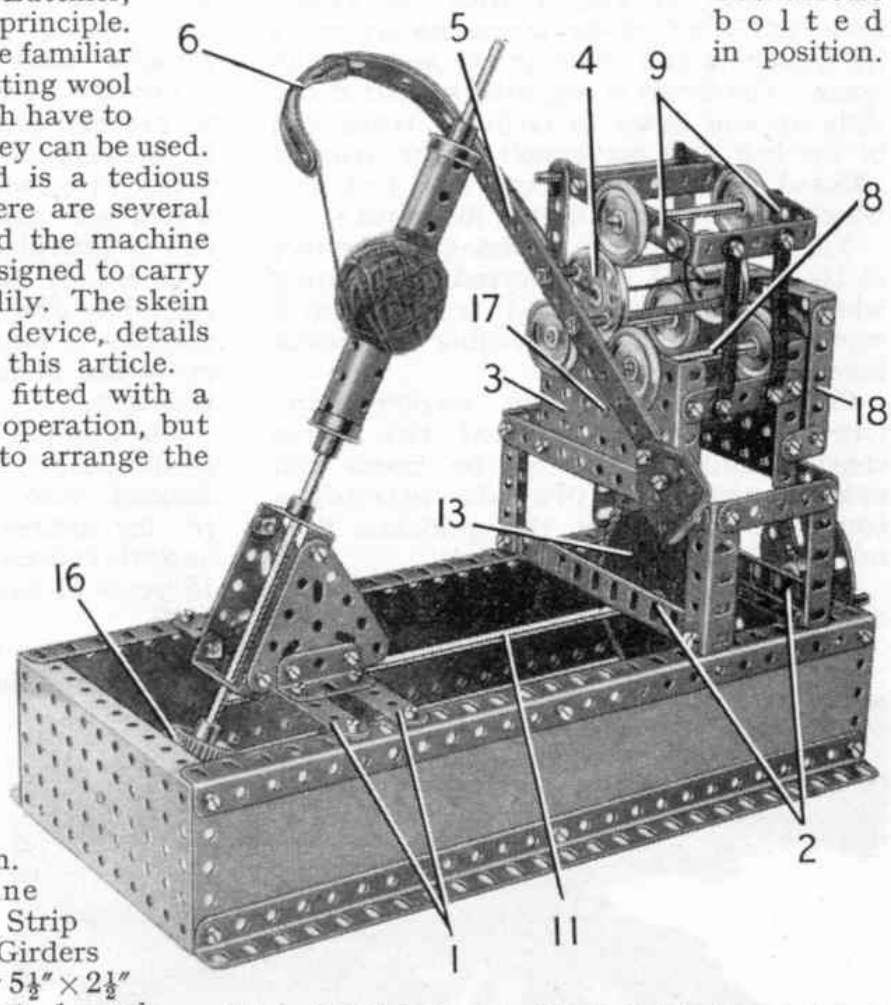

Fig. 1. This ingenious machine is designed to wind wool from a skein into a neat ball. It is based on a prize-winning model made by R. Luttmer, Wookey Hole, Somerset.

The cage 4 is supported and is driven by two sets of three wheels each. These wheels are 1″ Pulleys fitted with Rubber Rings, and they are arranged in pairs on three 3½″ Rods. The two lower Rods are mounted in the Flanged Plates 3 and each carries a 1″ Sprocket Wheel placed outside the rear one of the two Flanged Plates (Fig. 2). These Rods are numbered 7 and 8 in the illustrations.

The third pair of 1″ Pulleys is fixed on a Rod that is held by a Collar in two $3\frac{1}{2}$″ Strips 9. These Strips are connected by two $2\frac{1}{2}$″ × $\frac{1}{2}$″ Double Angle Strips, and at one end they pivot freely on a $3\frac{1}{2}$″ Rod 10. This Rod is held by Spring Clips in two $3\frac{1}{2}$″ Strips bolted vertically to the Flanged Plates 3. Two Tension Springs are fixed to one of the Double Angle Strips between the strips 9, and to one of the $2\frac{1}{2}$″ Strips that connect the Flanged Plates 3.

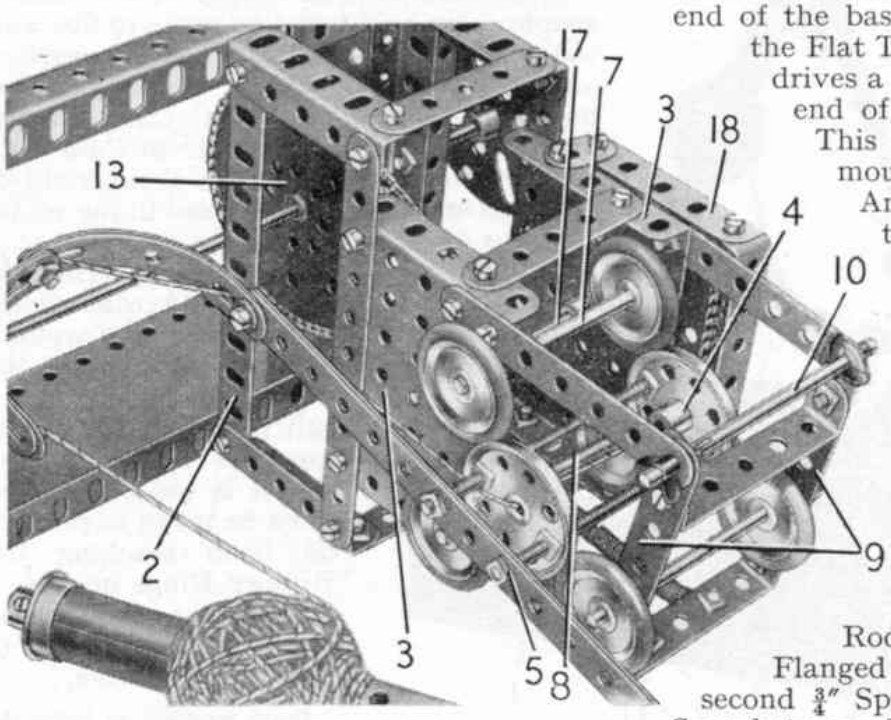

Fig. 2. A close-up of the novel friction-drive arrangement that rotates the winding arm.

The 1″ Pulleys are arranged on their Rods so that when the cage 4 is in position (Fig. 2) the Rubber Rings on the 1″ Pulleys engage the grooves of the $1\frac{1}{2}$″ Pulleys of the cage. This arrangement provides a friction drive to the cage, but leaves the bosses of the $1\frac{1}{2}$″ Pulleys free so that the wool can be fed centrally through the cage. The cage is held in place by the pressure exerted by the Tension Springs.

The main driving shaft is an $11\frac{1}{2}$″ Rod 11 supported in one end of the base and in a Flat Trunnion bolted to a $2\frac{1}{2}$″ Angle Girder that is fixed to one of the supports 1. The Rod carries a handle 12 formed by a Threaded Pin in a Face Plate, a 3″ Sprocket 13 and a $\frac{7}{16}$″ diam. Pinion 14. The Rod is held in place by a Collar, and Pinion 14 engages a 60-tooth Gear fixed on a $4\frac{1}{2}$″ Rod 15 mounted in one end of the base and in the lower hole in the Flat Trunnion. A $1\frac{1}{2}$″ Contrate 16 drives a 1″ Gear located at the lower end of the wool winding spindle. This spindle is an $11\frac{1}{2}$″ Rod mounted in two $1\frac{1}{2}$″ × $\frac{1}{2}$″ Double Angle Strips bolted between two $2\frac{1}{2}$″ Triangular Plates These Plates are attached to $1\frac{1}{2}$″ Angle Girders fixed to the supports 1. The wool is wound on a core formed by three Sleeve Pieces connected by Chimney Adaptors, and fitted at each end with a $\frac{3}{4}$″ Flanged Wheel.

The Sprocket 13 is connected by Chain to a $\frac{3}{4}$″ Sprocket on a 3″ Rod 17. Rod 17 is mounted in the Flanged Plates 3 and carries a second $\frac{3}{4}$″ Sprocket placed below the 1″ Sprockets on Rods 7 and 8. The three Sprockets are then connected by Chain. A guard over these Sprockets is provided by a $3\frac{1}{2}$″ × $2\frac{1}{2}$″ Flanged Plate 18 fitted with two $3\frac{1}{2}$″ × $\frac{1}{2}$″ Double Angle Strips. The guard is attached to one of the Flanged Plates 3 by two Fishplates.

To set up the model the wool is passed through the bosses of the $1\frac{1}{2}$″ Pulleys of the cage 4, and through a hole in the Strips 5.

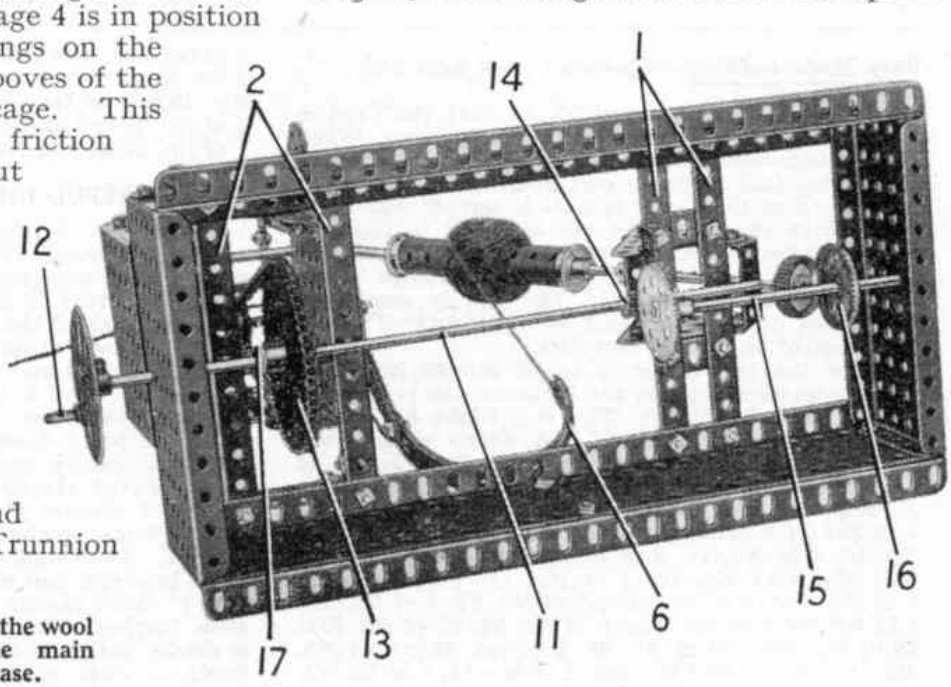

Fig. 3. An underneath view of the wool balling machine showing the main driving shaft housed in the base.

The wool is taken along these Strips and is threaded through holes in the semi-circular strip 6 as shown in Fig. 2. It is then wrapped three or four times round the centre Sleeve Piece on the winding spindle. The semi-circular strip 6 should be adjusted so that the wool is led from it exactly in line with the centre of the core on which it is to be wound. When the operating handle is turned the cage and the Strips 5 revolve, thus winding the wool round the core. At the same time the core rotates and pulls the wool through the machine, winding it in a neat ball on the spindle.

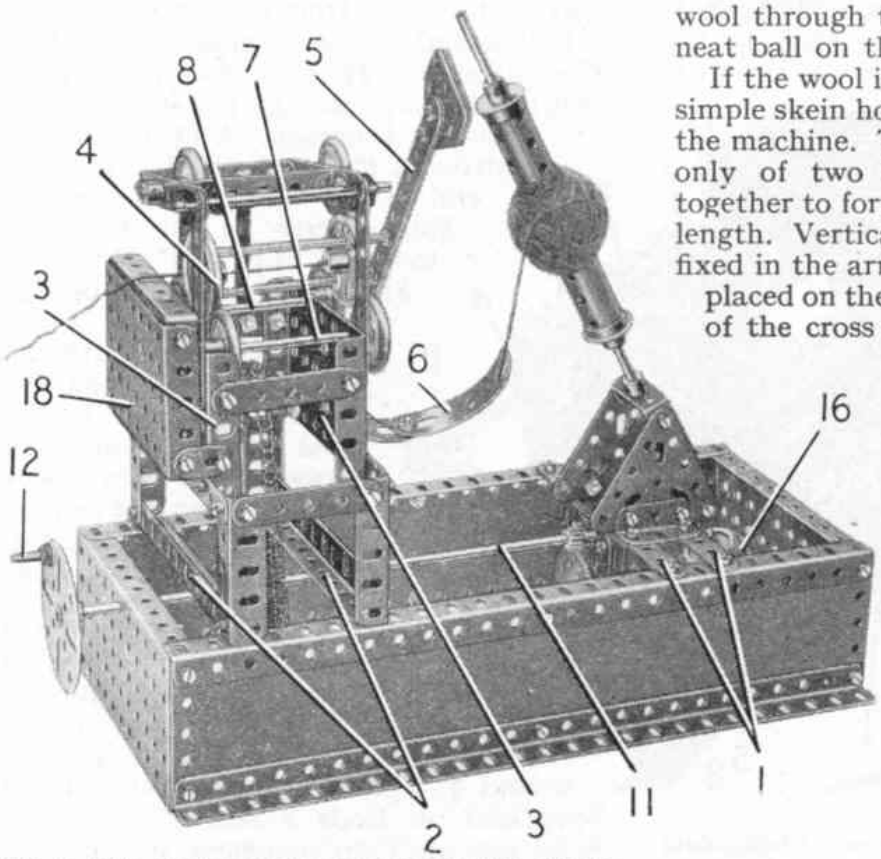

Fig. 4. This view shows the operating handle and the chain drive arrangement that rotates the winding arm.

If the wool is to be wound from a skein a simple skein holder can be made to use with the machine. The holder we used consisted only of two long Angle Girders bolted together to form a cross with arms of equal length. Vertical pins made from Rods were fixed in the arms so that the skein could be placed on them. A Rod fixed to the centre of the cross was pivotally mounted in a suitable base, so that the holder could rotate freely as the wool was wound.

The bearings for the Rods should be lubricated with light machine oil before the model is used, but care must be taken to prevent oil from reaching the Rubber Rings on the 1" Pulleys, as this would reduce the efficiency of the friction drive.

Parts required to build the Wool Balling Machine: 2 of No. 1b; 6 of No. 2; 4 of No. 3; 4 of No. 5; 4 of No. 8; 2 of No. 9; 5 of No. 9d; 2 of No. 9f; 2 of No. 10; 2 of No. 13; 1 of No. 15a; 4 of No. 16; 1 of No. 16b; 2 of No. 20b; 2 of No. 21; 6 of No. 22; 1 of No. 26c; 1 of No. 27d; 1 of No. 28; 1 of No. 31; 4 of No. 35; 88 of No. 37a; 72 of No. 37b; 10 of No. 38; 2 of No. 43; 2 of No. 48; 2 of No. 48a; 2 of No. 48b; 2 of No. 52; 3 of No. 53; 5 of No. 59; 2 of No. 76; 2 of No. 80a; 1 of No. 94; 1 of No. 95b; 2 of No. 96; 2 of No. 96a; 1 of No. 109; 4 of No. 111c; 1 of No. 115; 5 of No. 126a; 6 of No. 155; 3 of No. 163; 2 of No. 164; 2 of No. 197; 4 of No. 215.

Easy Model-building—(*Continued from page 605*)

Cord 17 and turns the rod 15, so that the Cord is wound round the drum 16 and raises the ram. When the Semi-Circular Plate disengages the Tyre on Pulley 13 the ram falls under its own weight, and the action is repeated as the Crank Handle is turned again.

To finish the model fix the cab roof to four 2½" Strips connected at their upper ends by 5½" Strips. For the roof use two 5½"×2½" Flexible Plates bolted to Obtuse Angle Brackets. The cab is completed by adding the floor, which is a 4½"×2½" Flexible Plate bolted to Double Brackets.

When the pile driver is to be moved from one place to another the ram and its frame can be lowered by turning a handle 18. This is a Right Angle Rod and Strip Connector on a 2" Rod, which is supported in Trunnions bolted to the cab roof. Tie a length of Cord to the Rod and to the top of the ram framework.

Parts required to build the Mobile Pile Driver: 4 of No. 1; 8 of No. 2; 2 of No. 3; 9 of No. 5; 3 of No. 10; 2 of No. 11; 8 of No. 12; 4 of No. 12c; 2 of No. 15b; 4 of No. 16; 1 of No. 17; 1 of No. 18b; 1 of No. 19g; 2 of No. 19b; 5 of No. 22; 1 of No. 23; 1 of No. 24; 2 of No. 24a; 6 of No. 35; 87 of No. 37a; 80 of No. 37b; 10 of No. 38; 2 of No. 38d; 1 of No. 40; 1 of No. 44; 5 of No. 48a; 1 of No. 51; 1 of No. 52; 4 of No. 90a; 5 of No. 111c; 2 of No. 125; 2 of No. 126; 2 of No. 126a; 1 of No. 142c; 1 of No. 176; 1 of No. 187; 2 of No. 188; 2 of No. 189; 1 of No. 190; 1 of No. 191; 2 of No. 192; 1 of No. 198; 1 of No. 212; 1 of No. 212a; 1 of No. 213; 1 of No. 214; 2 of No. 221.

A USEFUL IDEA FOR MODEL CRANES

Picture No. 4 (page 605) shows a simple way of attaching a length of Cord to a Crank Handle, when a Cord Anchoring Spring is not available. The Crank Handle is fitted to the model in the usual way and then one end of the Cord to be fixed to the Crank Handle is laid along it. Two or more Spring Clips are now pressed over the Cord and the Crank Handle, so that the Cord is held inside the rounded sections of the Spring Clips.

Picture No. 4 illustrates also a simple but effective brake suitable for small model cranes. The 1" Pulley 1 on the Crank Handle has a ⅜" Bolt screwed into its boss, and another ⅜" Bolt 2 is fixed by a nut in one of the Semi-Circular Plates that support the Crank Handle. The Crank Handle is able to slide slightly in its bearings, and when it is pushed to the right the two ⅜" Bolts engage and prevent the Crank Handle from turning. To free the Bolts the Crank Handle is simply pulled to the left and then it can be turned freely to wind or unwind the Cord.