New Meccano Model

Printing Machine

OUR new model this month is a comparatively small one, and although it does not require a large quantity of parts for its construction it is a most attractive one to build and operate. It is a reproduction of a platen type printing machine, of the kind used by many jobbing printers for producing such printed items as dance tickets, handbills and small showcards. The model is shown in the accompanying illustrations.

The base of the model should be constructed first, and it is made by bolting two $3\frac{1}{2}'' \times 2\frac{1}{2}''$ Flanged Plates 1 and 2 to $5\frac{1}{2}''$ Strips 3 on each side. One side of the base is extended downward by a $5\frac{1}{2}'' \times 2\frac{1}{2}''$ Flexible Plate, and the other by a $2\frac{1}{2}'' \times 1\frac{1}{2}''$ and a $2\frac{1}{2}'' \times 2\frac{1}{2}''$ Flexible Plate. The sides are strengthened by bolting to them $5\frac{1}{2}''$ and $2\frac{1}{2}''$ Strips, and one end is formed by a further $3\frac{1}{2}'' \times 2\frac{1}{2}''$ Flanged Plate.

The model is operated by an E20R Electric Motor concealed inside the base (see Fig. 2). The Motor is bolted by its flanges to two $3\frac{1}{2}'' \times \frac{1}{2}''$ Double Angle Strips fixed between the sides. The $\frac{1}{2}''$ Pinion on the Motor shaft engages a 57-tooth Gear on a $3\frac{1}{2}''$ Rod 4, mounted in the Motor sideplates and held in position by Collars. This Rod is fitted outside the base with a $\frac{3}{4}''$ Pinion 5, which meshes with a 57-tooth Gear on a $2\frac{1}{2}''$ Rod 6. Rod 6 passes through one of the Motor side-plates and one of the Strips 3, and it is held in place by Collars.

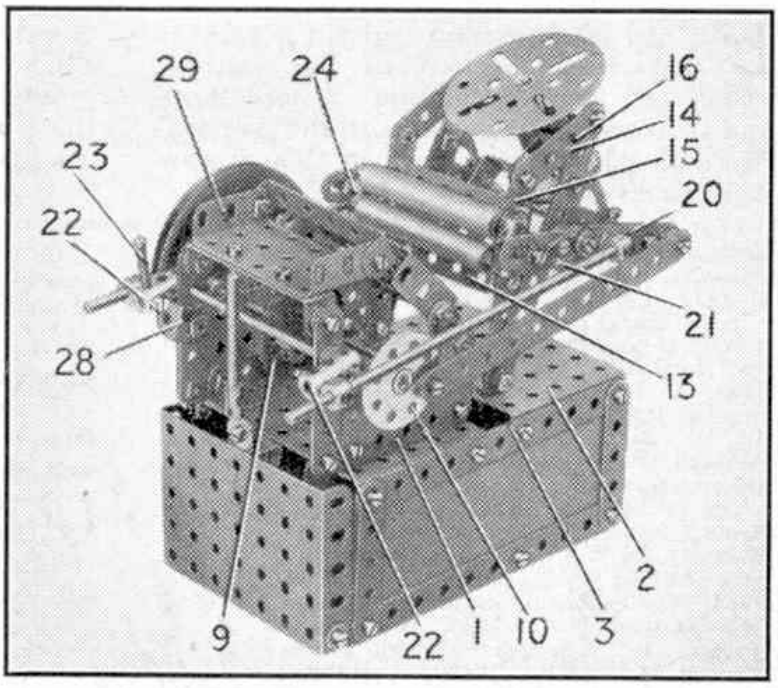

Fig. 1. General view of the model printing machine, showing the crank mechanism that operates the rollers. The platen is seen open and the rollers are over the type bed.

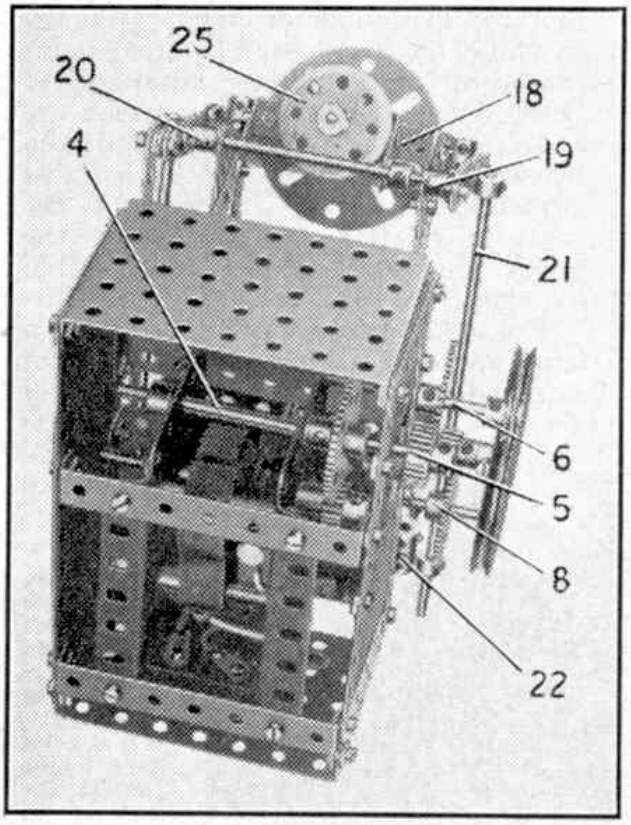

Fig. 2. The method of mounting the E20R Electric Motor is seen in this underneath view of the printing machine.

Two $2\frac{1}{2}''$ Angle Girders are bolted to the Flanged Plate 1, and a $3'' \times 1\frac{1}{2}''$ Flat Plate 7 is fixed to each Girder. A 5" Rod is supported in the Flat Plates, and is fitted with a 57-tooth Gear 8, an Eccentric 9 and a Bush Wheel 10. The Eccentric is fixed so that it has a throw of $\frac{1}{4}''$, and a Collar is used to hold the Rod in position.

The platen is a $2\frac{1}{2}'' \times 1\frac{1}{2}''$ Flanged Plate 11, and a Fishplate is attached to each of the lower corners of its flanges by a 3" Screwed Rod 12. The Screwed Rod passes through opposite holes in the flanges, and the Fishplates are held tightly in place by nuts. The strap extension of the Eccentric pivots on the Screwed Rod as shown in Fig. 3. The Fishplates are pivoted on $\frac{3}{8}''$ Bolts, each attached by two nuts to a corner hole of one of the Flat Plates 7.

The printing bed is a $2\frac{1}{2}'' \times 1\frac{1}{2}''$ Flanged Plate 13, and it is supported on each side by a framework consisting of a $4\frac{1}{2}''$ Strip 14, a $3\frac{1}{2}''$ Strip 15 and a 2" Strip 16. The $4\frac{1}{2}''$ and the $3\frac{1}{2}''$ Strips are pivoted at their lower ends by a lock-nutted bolt to a $2\frac{1}{2}'' \times \frac{1}{2}''$ Double Angle Strip 17, bolted to the Flanged Plate 2. The upper ends of the Strips are connected by the 2" Strips 16, and the sides of the framework are joined by a $2\frac{1}{2}'' \times \frac{1}{2}''$ Double Angle Strip 18.

The inking rollers are carried by a pivoted arm at each side of the printing bed framework. The arm 19 is a $2\frac{1}{2}''$ Strip bolted to a Double Arm Crank and extended by a 2" Slotted Strip. The arm 20 is made by bolting a 3" Strip to a Double Arm Crank, and is also extended by a 2" Slotted Strip. A 4" Rod is mounted in Flat Trunnions bolted to the Strips 14, and each arm is fixed by the boss of its Crank to one end of the Rod.

The drive to the rollers and to the printing bed is transmitted by a single $5\frac{1}{2}''$ Strip lock-nutted to the Bush Wheel 10 and to the end hole of the arm 20.

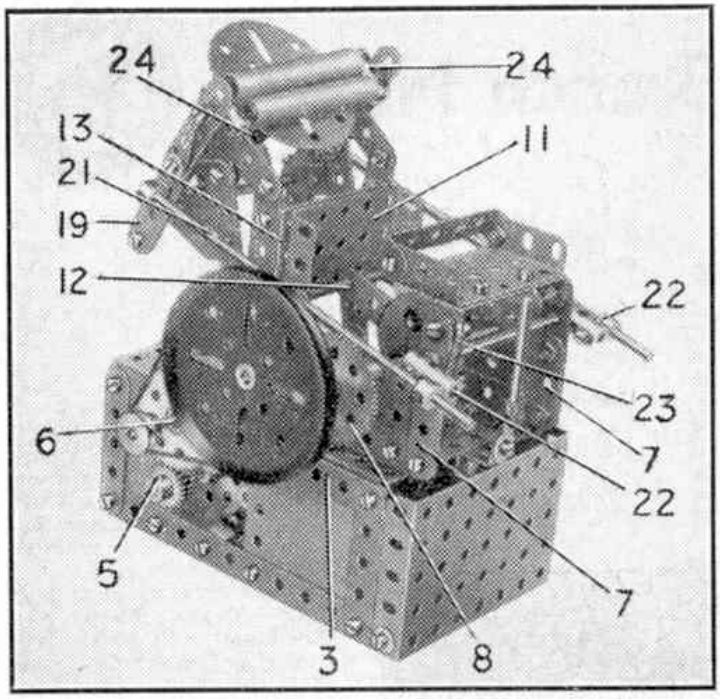

Fig. 3. A side view of the machine showing the belt drive to the flywheel. Here the platen is in the printing position and the rollers are over the inking plate.

A 6½″ Rod 21 is fixed in a Collar pivoted on the shank of a bolt in each of the arms 19 and 20, and these Rods are fixed also in Collars pivoted on ½″ Bolts passed through Couplings 22. The Couplings are carried on a Rod mounted in 2½″ Strips bolted to the Flat Plates 7, and one Coupling is fitted with a ¾″ Bolt 23 that acts as an operating handle. By moving this handle forward the printing bed is carried slightly backward, so that although all the movements of the machine operate without interruption, the platen does not come in contact with the bed.

The rollers are made by slipping tubes of rolled paper over 3½″ Rods held at each end in a Coupling 24. A ⅜″ Bolt is passed through the slotted hole of each of the Slotted Strips, and is fitted with a nut. The Bolts are then screwed into the centre tapped holes of the Couplings 24 and the nuts are tightened against them. The rollers are thus free to slide in the Slotted Strips, but a short piece of elastic fastened to the ⅜″ Bolts at each side and to the arms, tends to pull the rollers to the lower ends of the slots.

The inking plate is a Face Plate fixed on a 2″ Rod mounted in the Double Angle Strip 18 and in a Double Bent Strip bolted to it. The Rod is supported by Collars, and it carries at its lower end a 1½″ Contrate 25. The Contrate acts as a ratchet wheel, and it is engaged by a pawl formed by a 1″×½″ Angle Bracket 26. A Bolt is fixed by a nut in the slotted hole of the Angle Bracket, and its shank is screwed into a Collar. This Collar is fixed on a Threaded Pin screwed into a second Collar on the Rod carrying the roller arms. The Angle Bracket is moved backward and forward as the Rod is rocked under the action of the roller arms, and at each forward movement the inking plate is rotated about a quarter of a turn.

The drive from the Motor is completed by a Driving Band passed round a ½″ Pulley on Rod 6, and round a 3″ Pulley that represents the flywheel of the actual machine. The 3″ Pulley is fixed on a 2″ Rod, which carries also a ½″ Pinion 27 and is mounted in one of the Flat Plates 7 and in a Double Bent Strip bolted to it. The Rod is held in place by a Collar placed inside the Double Bent Strip, and the Pinion 27 meshes with the 57-tooth Gear 8.

The switch arm of the Motor is extended by a ½″ Reversed Angle Bracket, and a Rod and Strip Connector fitted with a 2″ Rod is fixed to the Bracket. A cover over the switch is provided by a 3½″×2½″ Flanged Plate attached to Fishplates bolted to the sides of the base.

A stop 28, the purpose of which is to prevent the printing bed from swinging too close to the platen, is provided by an Angle Bracket bolted to one of the Flat Plates 7. The head of the ½″ Bolt in one of the Couplings 22 engages this Angle Bracket when the printing bed is in its normal position for printing.

The model is completed by adding a feed plate 29 formed by a 2½″×1½″ Flanged Plate bolted to a 2½″×½″ Double Angle Strip. The Double Angle Strip is fixed by ⅜″ Bolts to the 2½″ Strips attached to the Flat Plates 7, Washers being used for spacing purposes.

This small model carries out almost all the actions of a platen printing machine, but owing to its size it is not suitable for actual printing. Model-builders with more parts at their disposal should not find it difficult to enlarge the model however, using the small machine as a guide for obtaining the various movements. The Face Plate used as the inking plate can be replaced in a larger model by a 4″ or a 6″ Circular Plate, and 5½″×2½″ Flanged Plates in place of 2½″×1½″ Flanged Plates for the platen and type bed.

Parts required to build model printing machine: 5 of No. 2; 2 of No. 2a; 2 of No. 3; 1 of No. 4; 7 of No. 5; 2 of No. 6; 2 of No. 9d; 4 of No. 10; 1 of No. 12; 1 of No. 12b; 2 of No. 14; 1 of No. 15a; 2 of No. 15b; 3 of No. 16; 1 of No. 16a; 2 of No. 17; 1 of No. 18a; 1 of No. 19b; 1 of No. 23a; 1 of No. 24; 1 of No. 25; 1 of No. 26; 3 of No. 27a; 1 of No. 28; 70 of No. 37; 17 of No. 37a; 30 of No. 38; 2 of No. 45; 4 of No. 48a; 2 of No. 48b; 3 of No. 51; 4 of No. 53; 2 of No. 55a; 13 of No. 59; 2 of No. 62b; 4 of No. 63; 2 of No. 73; 1 of No. 80c; 1 of No. 109; 1 of No. 111; 2 of No. 111a; 7 of No. 111c; 1 of No. 115; 1 of No. 125; 2 of No. 126a; 1 of No. 130; 1 of No. 186a; 1 of No. 188; 1 of No. 190; 1 of No. 192, 1 E20R Electric Motor.

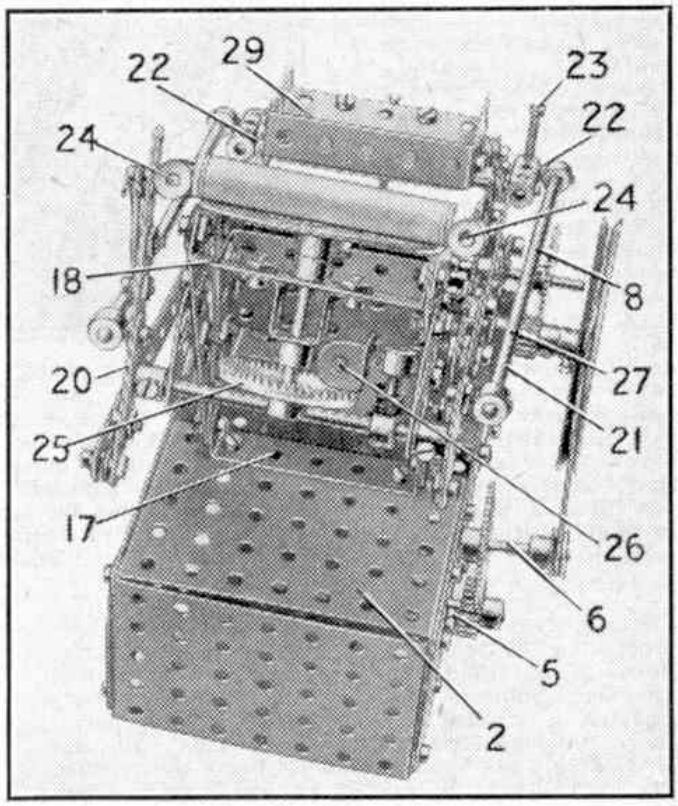

Fig. 4. In this rear view of the machine the ratchet feed mechanism to the inking plate can be seen.