More than a Meccanograph

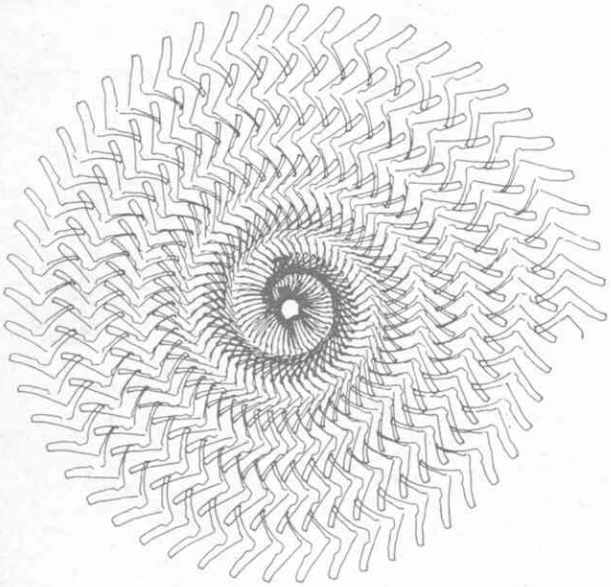

Fascinating to build, and even more fascinating to operate, the Meccano Spiralograph produces complex spiral patterns to order. You can set the machine to produce a variety of different designs.

FEW Meccano models are more fascinating than those amazing mechanical pattern - producing machines which, for many years, we have identified by the name 'Meccanograph'. I suppose most enthusiasts with enough parts at their disposal have, at some time or another, had a shot at building one of these captivating gadgets, but few designers have managed to produce anything quite so successful and yet so compact as the machines invented by Mr. Andreas Konkoly of Budapest, Hungary. Mr. Konkoly is now a past master of the Meccanograph, having built examples of many shapes and sizes.

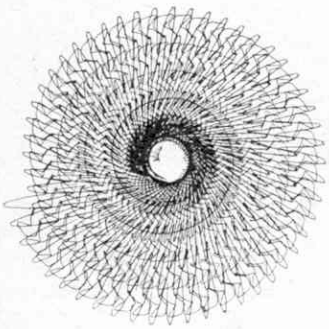

He has been written about in Hungarian magazines and has even appeared with his creations on Hungarian television.

Not least, he has provided the M.M. with some very useful material. In August 1965, for example, we published an article entitled 'A Magnificent Meccanograph'. As you will have guessed, the model featured was designed by Mr. Konkoly. Now he has sent us details of another model—this time of a machine he aptly describes as a 'Spiralograph'. Generally speaking, it's very similar to a Meccanograph except that, instead of drawing a regular pattern which ends at its starting point, it draws a pattern that gradually spirals into the centre.

This is a complete departure from the normal run of things and results in some very interesting and unusual designs. Any number of different patterns can be produced, in fact, although it takes a bit of practice to obtain the best combinations. Once we had mastered the operation of the model, we were so impressed with it that we decided to show it —working—on the Meccano Magazine stand at the Daily Mail Boys and Girls Exhibition which will be held at Olympia from December 27, 1966 to January 10, 1967 inclusive. If you pop along we'll be delighted to see you.

Construction of the model is not difficult, but great care must be taken to see that the framework is quite rigid and that all gears and other moving parts run perfectly freely. To begin with a strong framework is built up from two 12½ in. Angle Girders 1 connected through their first, fifth and eighteenth holes by three 5½ in. Angle Girders 2, 3 and 4, and through their twenty-fourth holes by a 5½ in. by ½ in. Double Angle Strip 5.

Bolted to the vertical flange of each Angle Girder 1 are two Flat Trunnions 6, while bolted to each horizontal flange are two Double Brackets 7 and a ½ in. by ½ in. Reversed Angle Bracket 8. Fixed to Double Brackets 7 is a 5½ in. by 2½ in. Flat Plate 9, whereas a 5½ in. Strip 10 is fixed to Reversed Angle Brackets 8. A 1 in. by ½ in. Angle Bracket 11 is secured by Bolts 11 through its long lug to the inside of each Flat Trunnion 6, then two 5½ in. Strips 12 and 13 are fixed one to the short lugs of each pair of these Angle Brackets by a ¾ in. Bolt that also carries a 1 in. fixed Pulley with Motor Tyre 14 and a Collar.

GEARING

Held by Collars in Strips 10 and 12 is a 4 in. Rod carrying a 57-teeth Gear Wheel 15 positioned so that it lies between Strip 10 and Angle Girder 2. A loose Collar 16 and two Washers are placed on the top of the Rod to be followed by a 6-hole Bush Wheel 17, but note that the Rod must not protrude through the boss of this Bush wheel. Fixed by a Nut in the face of the Bush Wheel is a ⅜ in. Bolt carrying above the Bush Wheel, in order, a Washer, a Fishplate, a Nut and two more Washers. A Threaded Pin 18 is mounted in the other end of the Fishplate.

Another 4 in. Rod, carrying a second 57-teeth Gear Wheel 19 is journalled in Flat Plate 9 and Strip 13, being held by a Collar beneath the Strip and a ½ in. Pinion 20 above the Plate. Note, however, that the Pinion is spaced from the Plate by a Collar, while another Collar is used to space the Pinion from an 8-hole Bush Wheel 21, fixed above it on the Rod. A ½ in. Pulley without boss is then slipped into the Rod and is held in place by a second 8-hole Bush Wheel 22. The holes in the face of this Bush Wheel must lie vertically above the holes in the face of Bush Wheel 21.

Journalled in Double Angle Strip 5 and Flat Plate 9 is a 3 in. Rod held in place by a Collar and a 2½ in. Gear Wheel 23, the latter spaced from Plate 9 by a Washer. A loose Collar is added to the Rod

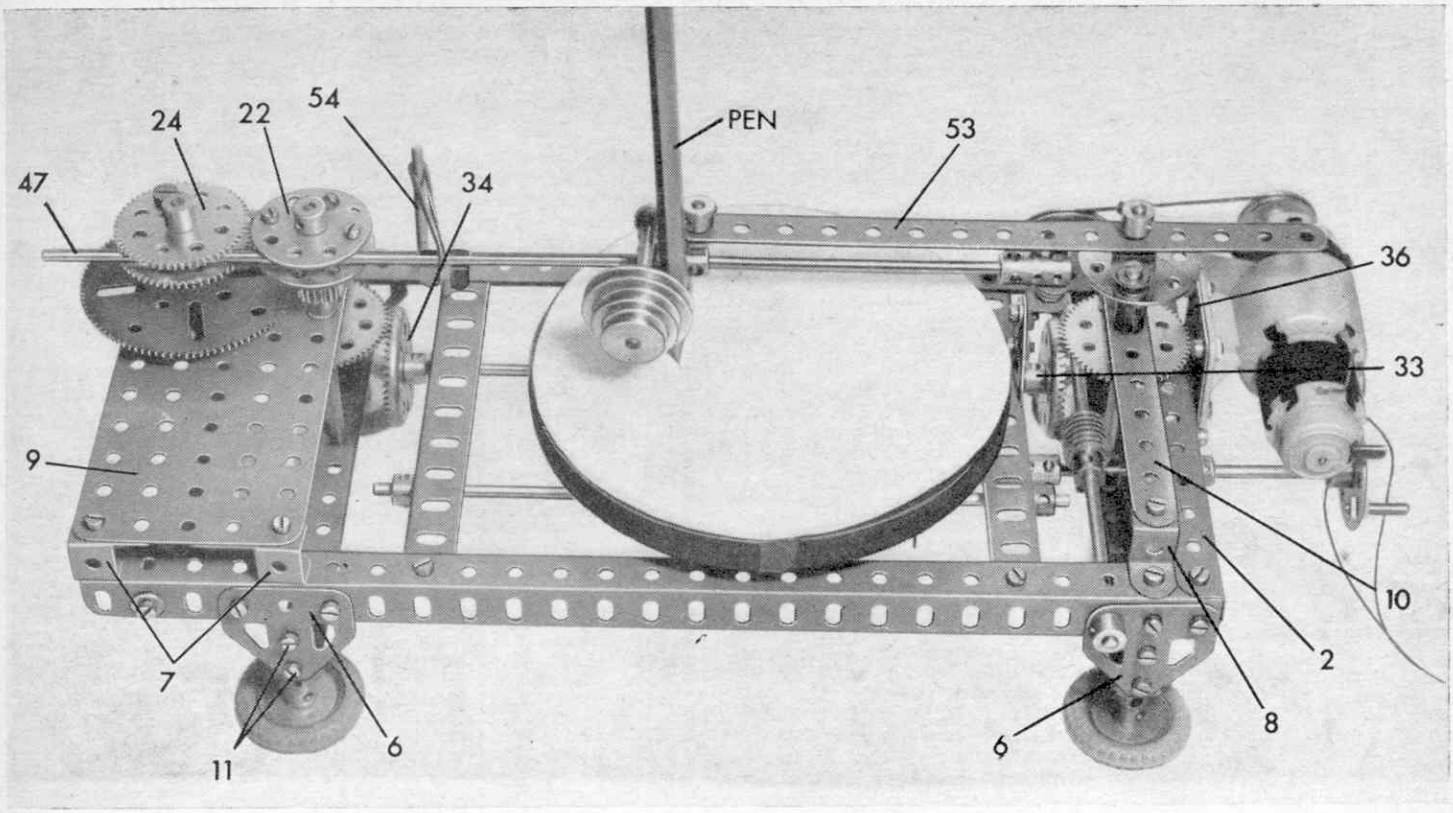

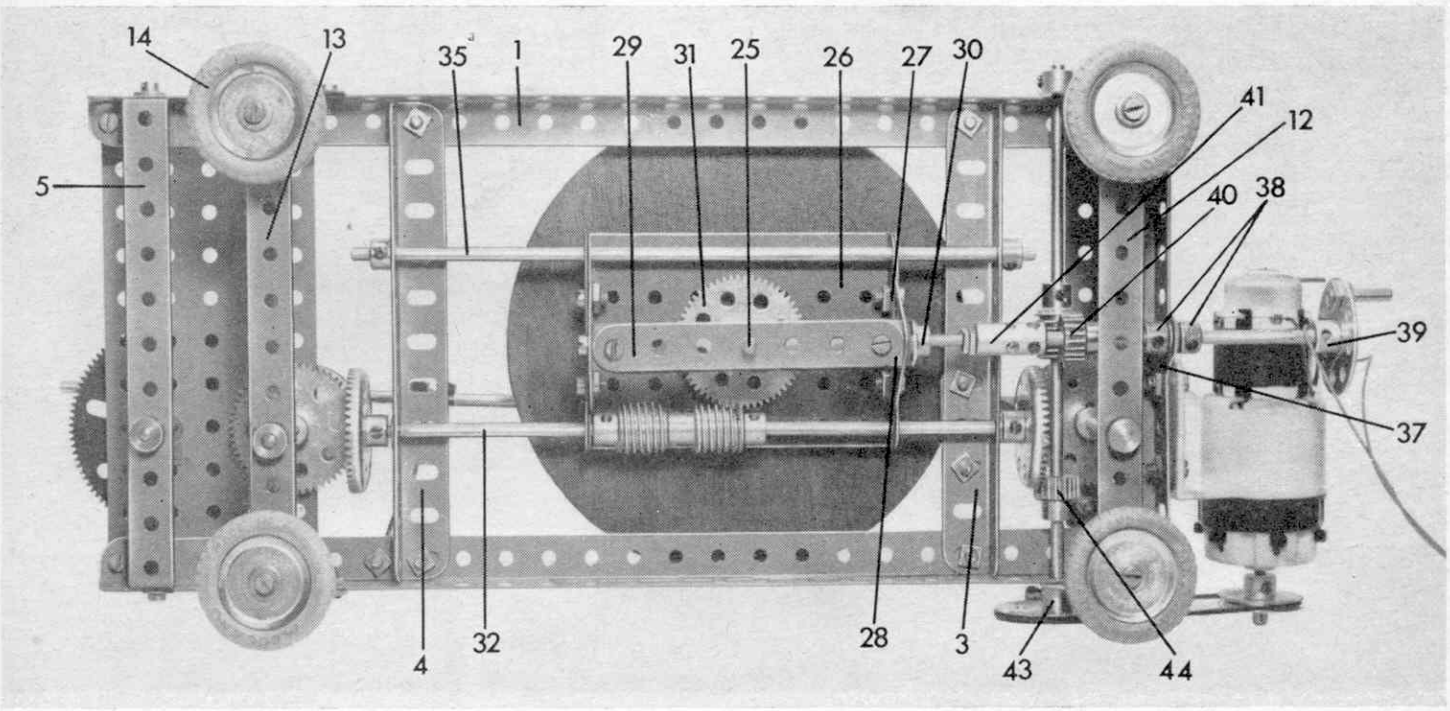

to be followed by two 57-teeth Gear Wheels 24 spaced by a second ½ in. Pulley without boss. Here, again, the holes in the faces of these Gear Wheels must be in line with each other. Gear Wheel 23 meshes with Pinion 20.

MOVING WORK TABLE

The actual work table itself is a circular piece of hard wood approximately 5½ in. diameter, and perhaps ½ in. thick, to the underside of which an 8-hole Bush Wheel is screwed. Fixed in the boss of this Bush Wheel, which must lie in the exact centre of the work table, is a 2 in. Rod 25. An arrangement is now built up from a 3½ in. by 2½ in. Flanged Plate 26 to each flange of which a 2½ in. Strip and a Flat Trunnion 27 is fixed. Two Angle Brackets 28, joined by a 3½ in. Strip 29, are bolted through the apex holes of the Flat Trunnions, at the same time securing a Threaded Crank 30 in place at one end. The completed arrangement is then mounted on Rod 25, being held in place by a 57-teeth Gear 31. This Gear engages with two Worms fixed on an 8 in. Rod 32, mounted in Angle Girders 3 and 4 and in the end holes in the flanges of Flanged Plate 26. A Collar is added to the Rod to act as a 'stop', while two 1½ in. Contrate Wheels 33 and 34 are mounted one on each end of the Rod, Washers being used as spacers. Another 8 in. Rod 35, held by Collars in Angle Girders 3 and 4, passes through the other end holes in the flanges of Flanged Plate 26. Contrate Wheels 33 engage with Gear Wheel 15 and Contrate Wheel 34 engages with Gear Wheel 19.

MOTOR AND DRIVE

A Power Drive Unit is bolted, along with a 1½ in. by 1½ in. Flat

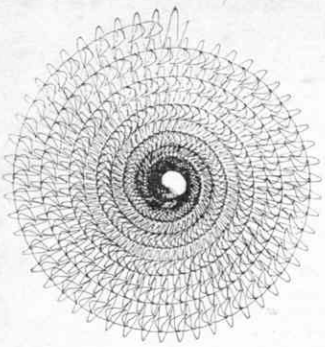

Plate 36, two 1½ in. Strips and a 1 in. Corner Bracket 37, to the vertical flange of Angle Girder 2. Held by Collars 38 in the Corner Bracket is a 4 in. Rod, carrying an 8-hole Bush Wheel 39, a ½ in. Pinion 40 and a Threaded Coupling 41. Fixed by Nuts in the threaded portion of Coupling 41 is a 3 in. Screwed Rod which is screwed into the boss of Threaded Crank 30. A Threaded Pin is fixed to the face of Bush Wheel 39.

Pinion 40 engages with a Worm 42 on a 6½ in. Rod X journalled in Angle Girders 1 and held in place by a Collar and a 1½ in. Pulley 43. Also fixed on this Rod is a ½ in. Pinion 44 that engages with Contrate Wheel 33. Pulley 43 on the other hand, is connected by a 6 in. Driving Band to a 1 in. Pulley on the output shaft of the Power Drive Unit.

PEN ARM

A 1 in. by ½ in. Angle Bracket is bolted to a Trunnion 45 which, in turn, is bolted to the horizontal flange of Angle Girder 3. A ¾ in. Bolt is passed through one end transverse smooth bore of a Coupling 46 and is fixed by two Nuts to the short lug of the Angle Bracket with three Washers spacing the Coupling from the upper Nut. The Coupling must move perfectly freely on the Bolt. Fixed in the longitudinal bore of the Coupling is an 11½ in. Rod 47, the other end of which lies between Bush Wheels 21 and 22 and between Gear Wheels 24.

Loose on Rod 47 is another Coupling 48 to the centre of which a Small Fork Piece 49 is secured by a ⅜ in. Bolt. Mounted in the end transversed tapped bores of the Coupling are a Handrail Support 50, in which a 2 in. Rod is fixed, and a Threaded Pin 51. A Cone Pulley 52 is mounted on the end of the 2 in. Rod to provide a weight for the pen which is held between the arms of small Fork Pieces 49 by a long B.A. bolt and nut. An ordinary ball-point pen is quite suitable for use in the model. Two Washers are placed on each Threaded Pin 18 and 51, then the Threaded Pins are connected by a 7½ in. Strip 53, loosely held on the Pins by Collars. Rod 47, incidentally, is held between Bush Wheels 21 and 22 and Gear Wheels 24 by a Driving Band, slipped over the Rod and caught on a 2 in. Screwed Rod 54 held by Nuts in one Angle Girder 1. Spring Clips prevent the Band from sliding on the Rod.

OPERATION

The working theory of the spiralograph is not really difficult to follow. As Rod X revolves, Pinion 44 drives Contrate Wheel 33 and consequently Contrate Wheel 34 also. Contrate Wheel 33, in turn, drives Gear Wheel 15 which causes Bush Wheel 17 to revolve. Threaded Pin 18, attached to this Bush Wheel, acts as a cam which activates Strip 53, and causes the pen holder to move backwards and forwards on Rod 47. At the same time Contrate Wheel 34 drives Gear Wheel 19, Causing Bush Wheels 21 and 22 and Pinion 20 to revolve. Pinion 20 meshes with Gear Wheel 23, therefore, Gear Wheels 24 will also revolve. If Pivot Bolts or ½ in. Bolts are inserted in the holes in the faces of Gear Wheels 24 and/or Bush Wheels 21 and 22, they will cause Rod 47 to oscillate sideways, which movement, of couse, is transmitted to the pen holder.

Assuming that there is a pen in the pen holder, we have seen, so far, how it is moved forward, back and sideways in a regular rhythm. While all this is going on, however, Worm 42 drives Pinion 40 which, in turn, causes the 3 in. Screwed Rod in Threaded Coupling 41 to revolve. As it revolves in Threaded Crank 30 the work table is moved slowly along Rods 32 and 35. The Worms on Rod 32, however, engage with Gear Wheel 31, thus causing the work table itself to revolve. Because of these additional movements the pattern being drawn by the pen slowly spirals inwards to the centre of the paper.

Different patterns can be obtained by altering the positions of the Bolts in Gear Wheels 24 and/or Bush Wheels 21 and 22, or by altering the distance of Threaded Pin 18 from the centre of Bush Wheel 17. In addition, the working length of Strip 53 can be changed or the Strip can even be removed altogether. The quantity of Bolts inserted into Gear Wheel 24 and Bush Wheels 21 and 22 will also affect the pattern as, indeed, will any combination of the foregoing methods. In short, there's plenty of choice.

PARTS LIST

1 of No. 1a	4 of No. 24	1 of No. 74
1 of No. 3	1 of No. 24b	1 of No. 80c
2 of No. 5	3 of No. 26	1 of No. 81
3 of No. 9	5 of No. 27a	8 of No. 111
1 of No. 10	1 of No. 27c	1 of No. 111c
4 of No. 11	2 of No. 28	3 of No. 115
2 of No. 12	3 of No. 32	1 of No. 116a
5 of No. 12b	2 of No. 35	1 of No. 123
1 of No. 13	72 of No. 37a	3 of No. 125
2 of No. 13a	64 of No. 37b	6 of No. 126a
1 of No. 14	14 of No. 58	1 of No. 133a
1 of No. 15b	1 of No. 48d	1 of No. 136
2 of No. 16a	1 of No. 53	3 of No. 147a
1 of No. 16b	18 of No. 59	1 of No. 186
1 of No. 17	1 of No. 62a	1 of No. 186a
1 of No. 21	2 of No. 63	4 of No. 142c
5 of No. 22	1 of No. 63c	1 Power Drive
2 of No. 23	1 of No. 70	Unit

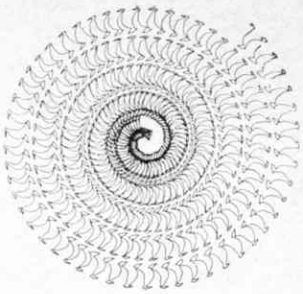

IMPORTANT
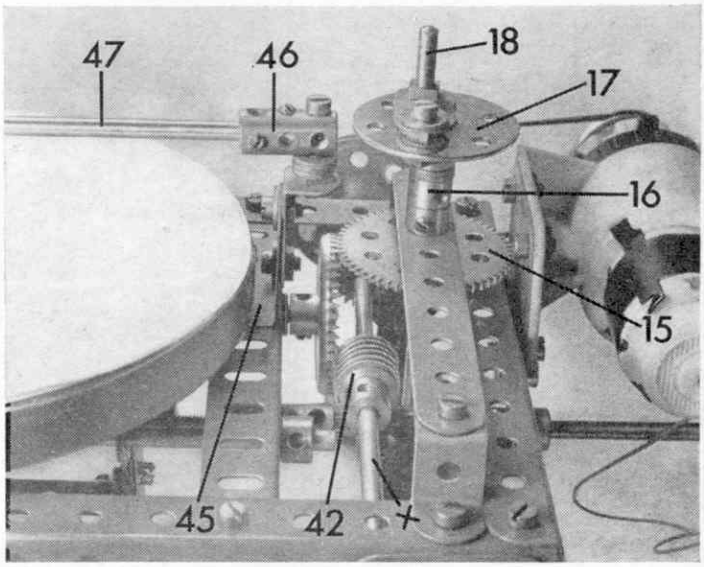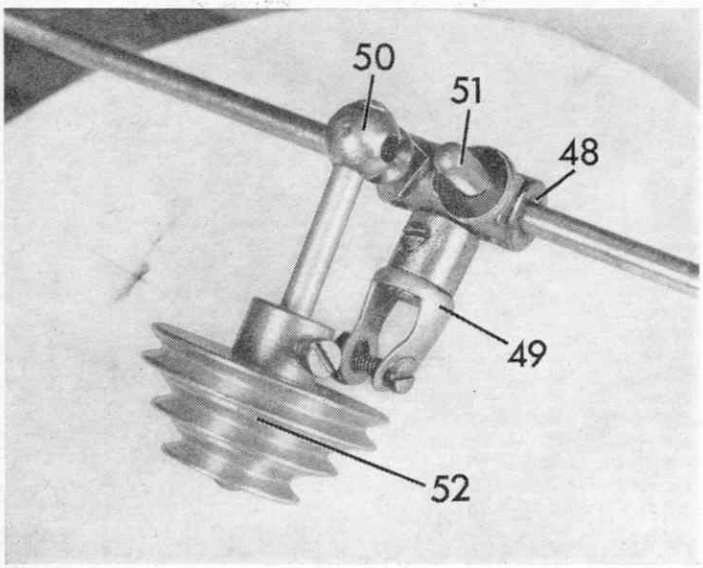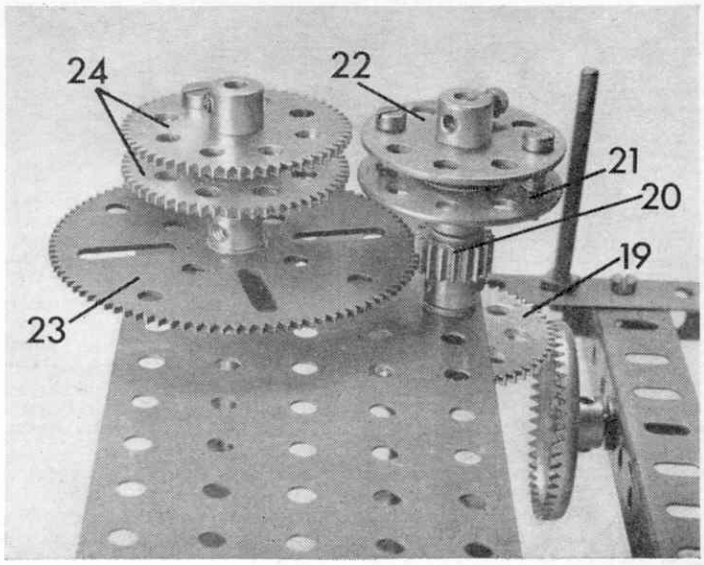
The patterns produced by this model should be drawn on 5½ in. diameter discs of plain paper. Meccano Magazine is able to offer specially cut discs to readers at 1s. 3d. for twenty including postage. Write to 'Spiralograph Discs', Meccano Magazine, Thomas Skinner and Co. (Publishers) Ltd., St. Alphage House, Fore St., London, E.C.2.