MODEL OF THE MONTH

By "Spanner"

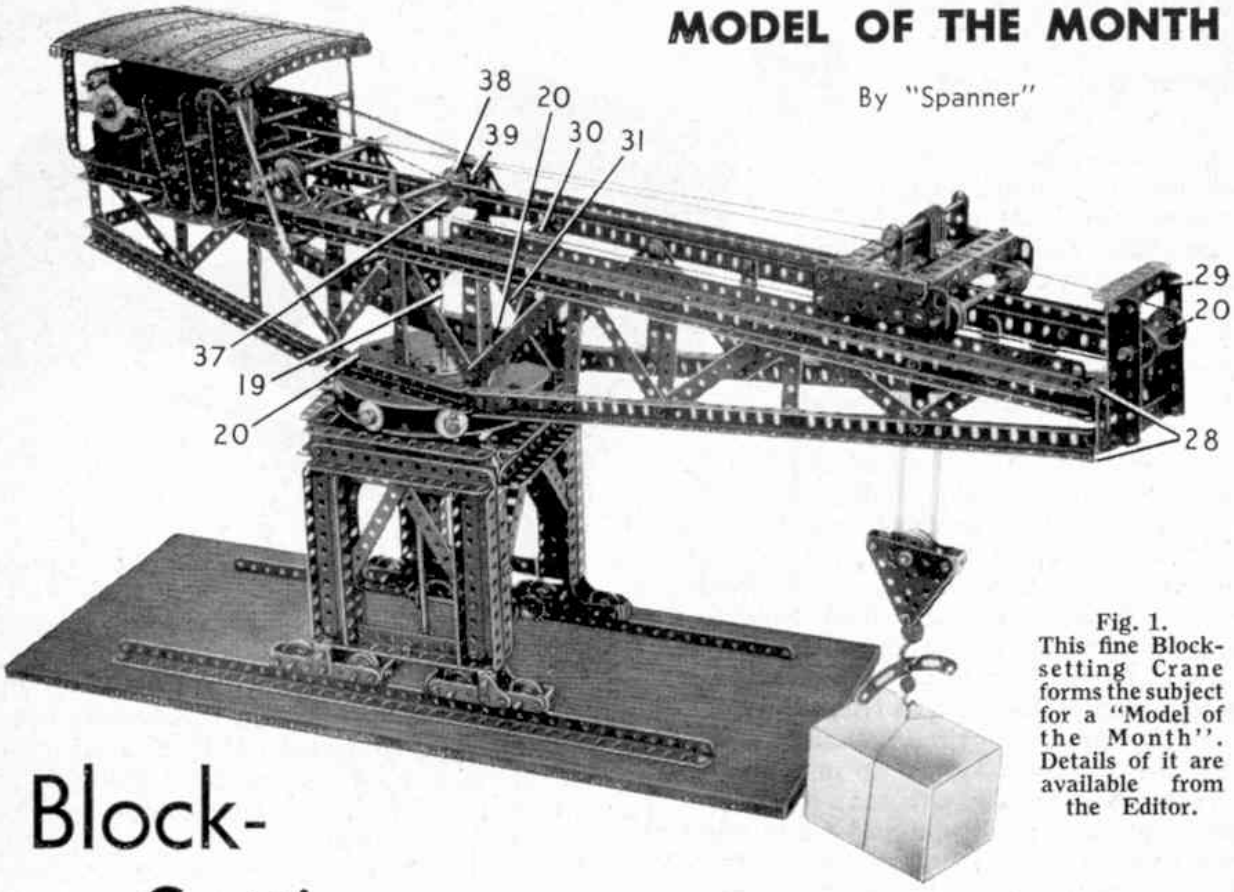

Fig. 1.
This fine Block-setting Crane forms the subject for a "Model of the Month". Details of it are available from the Editor.

Block-Setting Crane

IF a census were taken among Meccano model-builders on the question of their favourite subjects for models I am sure the vast majority would plump for cranes. It has always been so in the past and I have no reason to suppose that their popularity is in any way diminished in this age of rockets, space-ships and other marvels of modern science and engineering. One reason for this popularity is the realism with which it is possible to reproduce the details of an actual crane with Meccano parts; another is the fact that most model-builders prefer modelling subjects that contain gearing and other mechanisms. All of us like "to watch the wheels go round" and a really good model crane offers plenty of opportunity in this direction. In view of all this I have chosen a crane as

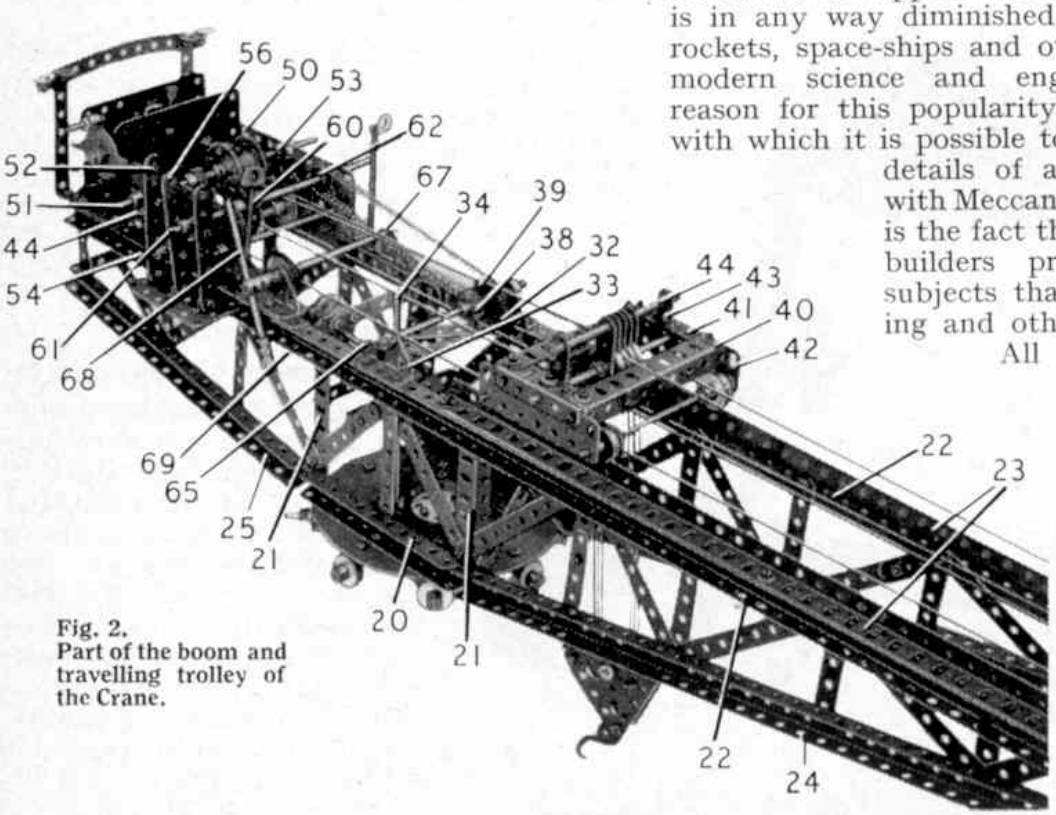

Fig. 2.
Part of the boom and travelling trolley of the Crane.

the subject for a "Model of the Month". It is a rather special type known as a Block-setting Crane, and it is shown in Fig. 1. It is based on a real crane employed for lifting and setting giant concrete blocks used in the building of breakwaters and harbour walls, etc.

Actual cranes of this type are among the biggest in the world, and some are capable of lifting and setting huge concrete blocks weighing anything up to 50 or more tons. In actual practice, special block-lifting and setting tackle is generally used with the crane for the purpose of setting the blocks at an angle, or on what is technically termed "on the inclined bond", as in this way the breakwater is made much stronger than it would be if the blocks were set horizontally, in similar manner to the bricks of an ordinary wall. This special setting tackle is not included in this model, but otherwise the model is a very good representation of its prototype.

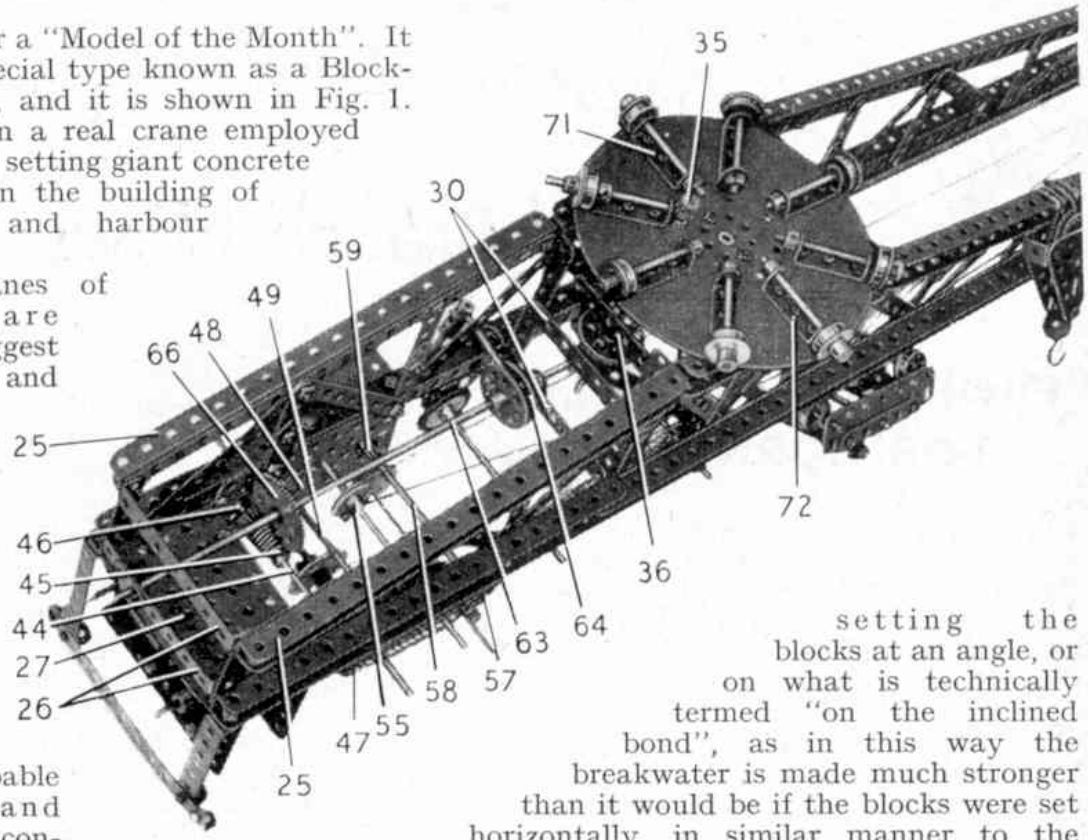

Fig. 3
The rear end of the boom seen from underneath and showing details of the roller bearing and cab mechanism.

As usual with these "Model of the Month" subjects, readers who wish to build this model, can obtain full constructional details, prepared for use in conjunction with these illustrations of the model simply by applying to the Editor and enclosing a 2d. stamp for return postage. Readers living in Canada, Australia, New Zealand, South Africa, Rhodesia, Ceylon, United States of America and Italy should apply to our main agents for those countries.

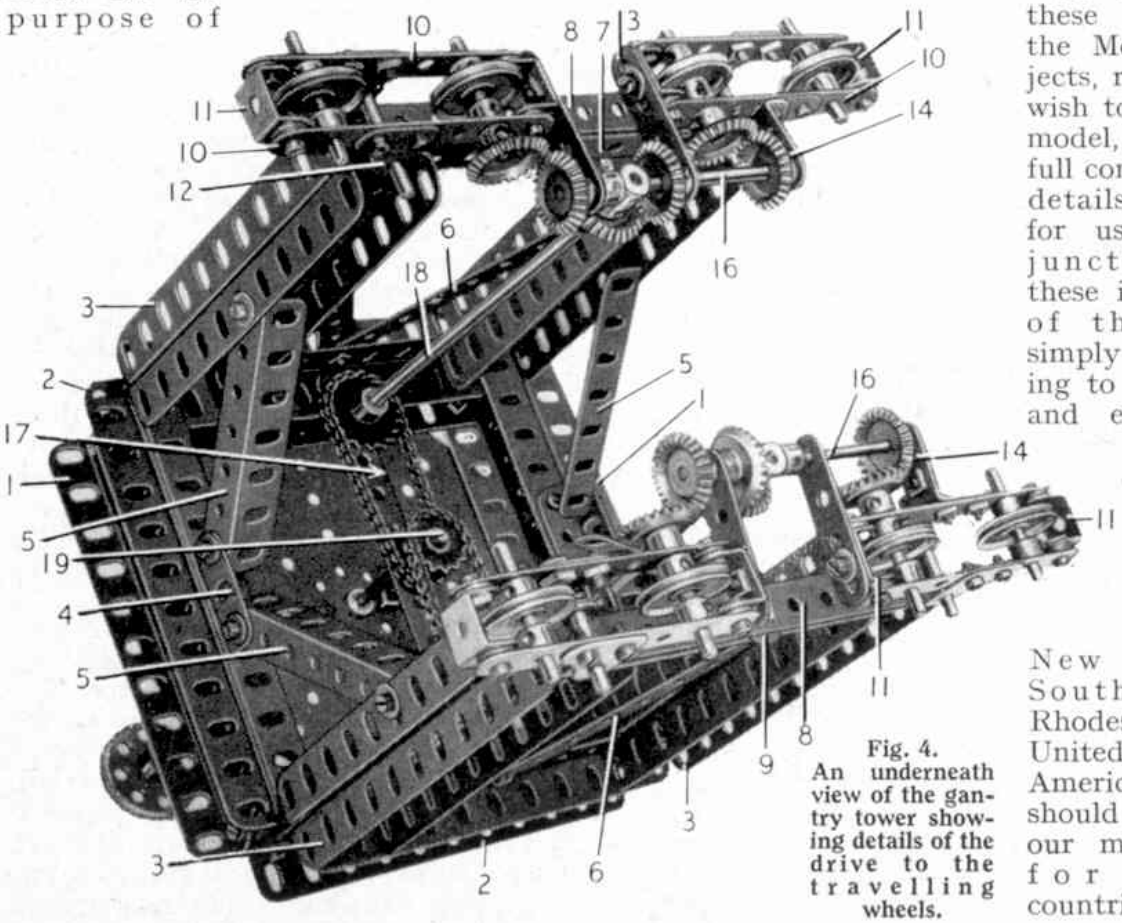

Fig. 4.
An underneath view of the gantry tower showing details of the drive to the travelling wheels.

MODEL OF THE MONTH.

Block-setting Crane.

Illustrated in the November, 1960, issue of the Meccano Magazine.

Top of Gantry.

First build two H-section Girders 1, each consisting of two $5\frac{1}{2}$" Angle Girders bolted to each side of a $5\frac{1}{2}$" Flat Girder. Another two H-section Girders 2 are made in a similar manner but with two $5\frac{1}{2}$" Flat Girders, one with its elongated holes pointing towards the base. These four H-section Girders are bolted together at each upper corner to form a rectangle.

The Sides of the Gantry.

At each corner of the gantry top four more H-section Girders 3 are secured to the protruding $5\frac{1}{2}$" Flat Girders to form the gantry legs. Two $1\frac{1}{2}$" Angle Girders 4 are fixed to the Angle Girders 1, to support the Angle Girders 3, with a $3\frac{1}{2}$" Angle Girder 5, and two $4\frac{1}{2}$" Strips 6 are bolted to the $5\frac{1}{2}$" Flat Girders and attached to the H-section Girders 3. A $5\frac{1}{2}$" Angle Girder 7 is bolted to the lower ends of each pair of H-section Girders as shown. Two Double Brackets with a $5\frac{1}{2}$" Strip 8 between their lugs, are bolted to the lower ends of each of the tower legs 3 to support the bogies. In the centre hole of the $5\frac{1}{2}$" Strip 8, a 2" Slotted Strip 9 is secured.

The Bogies.

There are four bogies, each of which is made from two $3\frac{1}{2}$" Strips 10, bolted to two Double Brackets 11, with two Washers between each lug and the Strips. To each Strip a 1" Corner Bracket 12 is bolted and this is used to attach the bogie to the Double Brackets on the tower legs. Two 1" Pulleys are placed in position on $1\frac{1}{2}$" Rods held in the $3\frac{1}{2}$" Strips by Collars.

One of the $1\frac{1}{2}$" Rods in each bogie also has a $\frac{7}{8}$" Bevel Wheel secured to it as shown. To the inner Double Bracket 11 of each bogie a 2" Slotted Strip 13 is bolted. A Fishplate 14 is attached to a $\frac{1}{2}$" x 1" Angle Bracket bolted to the $3\frac{1}{2}$" Strip 10. The bogies are fastened to the Gantry legs by passing a $1\frac{1}{2}$" Rod through the 1" Corner Brackets and the Double Brackets, a Collar being used to hold the Rod in place. A $3\frac{1}{2}$" Rod 16 journalled in each of the bogies as shown carries three Bevel Wheels, a Collar, and a Short Coupling. A $5\frac{1}{2}$" Strip 17 is bolted between the

H-section Girders 2. The drive to the bogies on each side of the model is taken through a $6\frac{1}{2}$" Rod 18 on which is fixed a Bevel Wheel and a 1" Sprocket Wheel at its upper end. The Rod is journalled in a hole of the $5\frac{1}{2}$" Strip 17 and in the bore of the Short Coupling.

Now bolt a 6" Circular Plate to the H-section Girders 1 and 2, using Washers where required to level up. A 60-tooth Gear Wheel is secured in the centre of the Circular Plate, each of the securing bolts having two Washers on its shank, and this provides a bearing for an 8" Rod 19 that carries two $\frac{3}{4}$" Sprocket Wheels. Sprocket Chain connects each of these Sprockets with the Sprockets on the Rods 18 as shown.

The Roller Bearing.

To make the roller bearing bolt eight $1\frac{1}{2}$" x $\frac{1}{2}$" Double Angle Strips to a 6" Circular Plate, spacing them away from it with two Washers on each Bolt. A $2\frac{1}{2}$" Rod is passed through the lugs of each Double Angle Strip and is fitted with a $\frac{3}{4}$" Flanged Wheel at its outer end and a Collar to hold it in place at its inner end. One of the Rods has the retaining Collar between the lugs of the Double Angle Strip to allow for a 7/16" Pinion 35. The Flanged Wheels ride on the rim of the Circular Plate, which has a Wheel Disc bolted to its centre on the other side.

Two $5\frac{1}{2}$" Angle Girders 20, forming a U-section Girder are secured to each side of the Circular Plate by the Bolts 71 and 72. The bearing can now be placed in position on the Rod 19.

Details of the Boom.

To each of the compound angle girders 20, bolt four upright $4\frac{1}{2}$" Angle Girders 21, and along the upper edge extend a pair of U-section channel Girders 22, each composed of two $24\frac{1}{2}$" and two $9\frac{1}{2}$" Angle Girders overlapped two holes. The trolley rails 23 are $18\frac{1}{2}$" Angle Girders bolted to the $24\frac{1}{2}$" Angle Girders 22. The Girders forming the lower member of the boom are similarly constructed, the forward portion consisting of $18\frac{1}{2}$" Angle Girders 24 attached to the Angle Girders 20 by a $2\frac{1}{2}$" Curved Strip, and the rear portion of Angle Girders 25, attached with a 2" Strip. The upper and lower members are braced together by Strips of various lengths arranged as shown. The rear Angle Girders 25 are joined together by two $3\frac{1}{2}$" x $\frac{1}{2}$" Double Angle Strips 26 and a $4\frac{1}{2}$"

$2\frac{1}{2}$" Flat Plate 27. Two $5\frac{1}{2}$" Angle Girders 28 and two $1\frac{1}{2}$" Strips connect the upper and lower members of the boom at the front. Two $3\frac{1}{2}$" Angle Girders 29 are bolted to the Angle Girders 28, and another $3\frac{1}{2}$" Angle Girder joins them at the top. The upright Angle Girders 21 are supported by three $3\frac{1}{2}$" Strips 30 and two crossed $5\frac{1}{2}$" Strips 31 at the front. A $3\frac{1}{2}$" x $\frac{1}{2}$" Double Angle Strip 32 is bolted between the Angle Girders 22, with two Trunnions 33 secured to the top of the Girders. A $1\frac{1}{2}$" and a $2\frac{1}{2}$" Strip are bolted to the Double Angle Strip 32 to provide a bearing for the upper end of the $6\frac{1}{2}$" Rod 34, which carries a $1\frac{1}{2}$" Contrate Wheel 36 and a 7/16" Pinion 35 (see illustration of roller bearing). The 8" Rod 19 has a $1\frac{1}{2}$" Contrate Wheel secured to its upper end, and this engages a $\frac{3}{4}$" Pinion 38 on a $4\frac{1}{2}$" Rod, that carries also a 1" Sprocket Wheel 39. The Rod is journalled as indicated in the general view of the completed model.

The Crane Trolley.

The trolley is designed to travel along the rails 23. Two $4\frac{1}{2}$" Angle Girders 40, together with two $2\frac{1}{2}$" Angle Girders 41 form a rectangular frame. To the $2\frac{1}{2}$" Angle Girders are bolted $3\frac{1}{2}$" Flat Plates 42. The trolley runs on $\frac{3}{4}$" Flanged Wheels fixed on two 5" Rods held in position by Collars. Two $\frac{1}{2}$" x 1" Angle Brackets 43 are bolted to the Girders 41. Four 1" loose Pulleys are placed on a 5" Rod, with 2" Strips between them. The Strips are held on another 4" Rod 44 journalled in the $\frac{1}{2}$" x 1" Angle Brackets 43 bolted to the side girders of the trolley.

The Drive Mechanism.

Bolt a $4\frac{1}{2}$" x $2\frac{1}{2}$" Flat Plate 50 to each side of the Angle Girders 22. An E20RS or E15R Electric Motor is now bolted to a Flat Plate 27 fixed across the end of the boom as shown. The Motor shaft carries a Worm so as to engage with a 1" Gear Wheel (not shown) on a $4\frac{1}{2}$" Rod 44. Another Worm 45, a $\frac{1}{2}$" Pinion 46, and a $\frac{3}{4}$" Sprocket Wheel 47 are also fixed on the Rod. The $\frac{1}{2}$" Pinion 46 drives a 57-tooth Gear 48 on the Rod 49, which carries a $\frac{3}{4}$" Pinion. Both the Gear and the Pinion have their bosses against the Flat Plates 50. The winding drum is formed from two Bush Wheels fixed to a $6\frac{1}{2}$" Rod 51 about $\frac{3}{4}$" apart. A $\frac{1}{2}$" Pinion is fixed on this Rod 51, and is adjusted so that when the lever 52 is moved the Pinion engages with the

Cont'd./

Gear Wheel 48 and at the same time a $\frac{3}{8}$" Bolt fitted in a Collar 53 disengages a $\frac{3}{8}$" Bolt fixed in the Flat Plate 50. The lever is attached to a loose Collar by a nut and bolt and placed between two fixed Collars.

All the three Control levers are similar, and are pivotted to Angle Brackets fixed to a 3" x $1\frac{1}{2}$" Flat Plate, that is secured to the bottom edge of the Angle Girders 22. A $6\frac{1}{2}$" Rod 54 carries two 1" Pulleys 55 and a 50-tooth Gear Wheel. By operating lever 56 the Gear can be engaged with a $\frac{3}{4}$" Pinion on Rod 49.

A $\frac{3}{4}$" Sprocket Wheel 57 and a $\frac{1}{2}$" Pinion 59 are fixed on a $4\frac{1}{2}$" Rod 58. Connect the $\frac{3}{4}$" Sprocket Wheels 47 and 57 by a length of Chain. The Pinion 59 drives a 57-tooth Gear Wheel 60 on a $6\frac{1}{2}$" Rod 61 carrying a $\frac{3}{4}$" Sprocket Wheel 62, which is connected by Chain to the Sprocket Wheel 39.

A 1" Corner Bracket is bolted to the top Double Angle Strip 26 and also to the top $3\frac{1}{2}$" Strip 30. An $11\frac{1}{2}$" Rod 63, with two Bush Wheels 64, and a 60-tooth Gear Wheel is placed in the 1" Corner Brackets. Two Trunnions 67 are bolted to the Angle Girders 22. In these is placed a 5" Rod which carries a 1" Pulley fitted with a Rubber Ring and is held in place by Collars. On one end of the Rod is a Coupling which holds a $3\frac{1}{2}$" Rod 68. Rod 68 in turn carries at its lower end another Coupling in which is fixed a 2" Rod 69 that protrudes between the Bush Wheel 64. When the Rod 68 is moved over it brings the $\frac{1}{2}$" Pinion 65 into mesh with the Contrate Wheel 36 and the 60-tooth Gear Wheel 66 into mesh with the Worm Wheel 45. Two 1" loose Pulleys 70 are placed on a Rod mounted at the front of the boom as shown in the general view of the model. Two lengths of cord are attached to the front and rear Angle Girders of the trolley passed around the Pulleys 70 and those on the Rod 54, and then attached to the trolley again.

Pulley Block.

Two $2\frac{1}{2}$" Triangular Plates are joined together by two Double Brackets, and three 1" loose Pulleys, spaced with Washers are placed between the Triangular Plates on a $1\frac{1}{2}$" Rod held by Collars. A large Loaded Hook is carried on a 1" Screwed Rod passed through the apex holes of the Triangular Plates. The cord for raising and lowering the load hook is first tied to the Rod 51 between the Bush Wheels, and it is passed in turn around the four 1" loose Pulleys of the trolley and the three similar Pulleys that form the sheaves of the load pulley block. The end of the cord is then secured to the Angle Girder 28 at the front of the boom.

Finally a cover, formed from three $5\frac{1}{2}$" x $2\frac{1}{2}$" and one $5\frac{1}{2}$" x $1\frac{1}{2}$" Flexible

Plates edged with Strips, is fixed in position over the gear-box by means of two $3\frac{1}{2}$" x $\frac{1}{2}$" Double Angle Strips and two $3\frac{1}{2}$" Screwed Rods.

The Rod 68 controls the swivelling movement of the boom, and the lever operating the Rod 61 controls the travelling motion. The other levers control the traversing movement of the trolley and the hoisting and lowering of the load hook.

Parts required to build the Block-setting Crane:- 2 of No. 1b; 9 of No. 2; 18 of No. 2a; 21 of No. 3; 4 of No. 4; 13 of No. 5; 9 of No. 6; 3 of No. 6a; 4 of No. 7; 8 of No. 7a; 8 of No. 8a; 38 of No. 9; 8 of No. 9a; 7 of No. 9b; 2 of No. 9d; 2 of No. 9f; 2 of No. 10; 14 of No. 11; 9 of No. 12; 4 of No. 12b; 1 of No. 13; 1 of No. 13a; 6 of No. 14; 4 of No. 15; 4 of No. 15a; 2 of No. 15b; 3 of No. 16; 8 of No. 16a; 1 of No. 17; 13 of No. 18a; 12 of No. 20b; 11 of No. 22; 9 of No. 22a; 4 of No. 24; 1 of No. 24a; 2 of No. 25; 4 of No. 26; 1 of No. 26c; 1 of No. 27; 2 of No. 27a; 2 of No. 27d; 2 of No. 28; 12 of No. 30; 1 of No. 31; 2 of No. 32; 2 of No. 35; 316 of No. 37a; 268 of No. 37b; 166 of No. 38; 2 of No. 40; 8 of No. 48; 6 of No. 48b; 3 of No. 53a; 14 of No. 55a; 1 of No. 57b; 2 of No. 57c; 53 of No. 59; 2 of No. 63; 2 of No. 63d; 1 of No. 73; 2 of No. 76; 2 of No. 77; 2 of No. 80a; 1 of No. 82; 2 of No. 89; 1 of No. 89a; 2 of No. 90; 1 of No. 94; 3 of No. 96; 5 of No. 96a; 10 of No. 103; 2 of No. 103d; 31 of No. 111c; 4 of No. 126; 8 of No. 133a; 2 of No. 146; 1 of No. 155; 1 of No. 173a; 1 of No. 189; 3 of No. 192; 1 E15R or E20RS Electric Motor; 1 Block of Wood; 1 Baseboard and 4 Wood Screws.