Flipper—The MM Submarine

by Ron Warring

IN this unusual model we have endeavoured to combine realistic appearance with very simple and straightforward construction and also avoid, as far as possible, the use of more expensive 'block' sizes of balsa. Balsa is employed throughout for all the parts (with a few exceptions) because it is easy to work and also produces the most favourable weight distribution. This is important, for our sub is a real working model.

The size has been selected as the largest which can be produced economically from standard balsa sizes, giving a model approximately 35 in. long. Again this is an advantage from the performance point of view. Small model submarines are really only toys and have a very limited performance. The 'M.M.' sub is large enough to install radio control, if you want.

The full size plan shows all the main parts full size, and also full size views of the side and plan elevations of the complete model. The latter are split at the line X-X as the model is too long to be drawn complete on a single plan sheet.

The only time you need to refer to the full length of the plan is for making a tracing of the deck outline and bottom outline. These are the thick black outlines on the plan view. Make sure that you have a long enough piece of tracing paper to start with (36 in. long) and trace the front portion of the deck and bottom outlines up to the limit of the plan, drawing a vertical line at this point. Turn the plan over, locate this line on the left hand side of the second plan sheet and complete tracing the deck and bottom outlines. Note that when tracing the bottom outline you should also mark on the bulkhead positions.

Construction of the model from now on will be described in progressive steps. It is important to follow these in order, otherwise you may run into difficulties at a later stage. For example, unless you fit the studding to bulkheads 3 and 4 before you fit these formers in place you will have nothing with which to secure the main hatch when you have completed the hull.

1. Trace the bottom outline and bulkhead positions on to a 36 in. by 3 in. sheet of ½ in. thick hard or medium hard balsa—see Fig. 1. (Sheet of this thickness usually tends to be cut from soft rather than hard grade, so you may have trouble in locating hard stock. Pick out the hardest sheet you can find.) This should then be cut out accurately with a *saw*, not a modelling knife, as this will give a truer cut. The curves involved are quite moderate so you can use a stiffback saw as the easiest method of ensuring a square cut.

2. Trace all the bulkhead shapes from the plan on to ½ in. sheet balsa and cut out accurately, again using a stiffback saw. If you have any trouble in cutting accurately, cut outside the true outline required and trim down with sanding sticks of glasspaper.

3. A 2½ in. length of 4BA brass studding must now be fixed to the centre of each of bulkheads 3 and 4. Studding is simply like a screw without a head. The bulkhead plan drawing shows the position of the studding which is sewn in place with a 1 in. length of studding projecting from the top of the bulkhead. Finally add a coating of cement to help hold the studding in place, or, better still, a coat of epoxy resin.

4. Now cut the hog from 1 in. by ¼ in. obeche. This should be cut to a length of 15·4 in. and cemented along the centre of the bottom so that it runs from the aft side of bulkhead 1 position to the forward side of bulkhead 5 position. All the bulkheads can then be cemented in position to complete this assembly as in Fig. 2.

5. At this stage you must fit the stern tube which will carry the propeller shaft. Refer to the side elevation plan drawing of the rear of the hull. Cut a notch in the aft end of the hull bottom until the stern tube will rest at the correct angle when inserted through the hole in bulkhead 5 and the notch in the bottom. Then fill in this notch with scrap balsa and secure the stern tube to bulkhead 5 with epoxy resin adhesive.

6. Cut out parts 6, 7 and 8 from ½ in. sheet balsa. These are cemented in place as shown in Fig. 3. You can work to the dimensions shown in this figure, or mark the position of these parts directly off the plan. Note that the bottom of part 6 will have to be notched to fit over the stern tube, otherwise assembly is

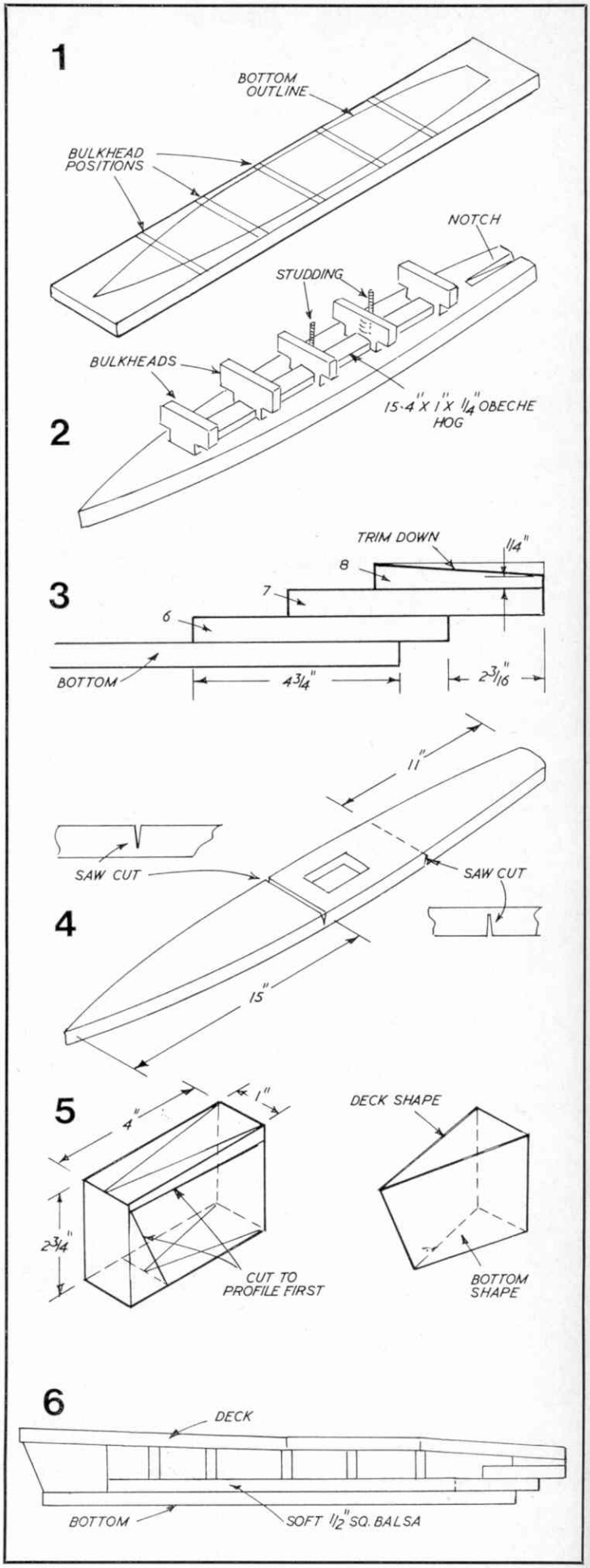

quite straightforward. Leave to set and then trim off the top of part 8 at an angle so that its depth at the rear end is reduced to $\frac{1}{4}$ in. (You can, if you prefer, do this trimming before cementing part 8 in place.)

7. The deck outline is now traced onto $\frac{1}{2}$ in. balsa sheet and cut out. Note that there is also a hatch opening to cut out, this being shown on the plan view drawing.

Mark 15 in. back from the front and draw a line across the top of the deck. Mark 11 in. in from the rear end and draw a line across the bottom of the deck. Shallow notches are then cut with a saw at these points, as shown in Fig. 4. These represent the point at which the deck angle changes and enables the thick sheet to be bent without breaking.

8. The bow block must now be cut to shape. Starting point is to cut a block 4 in. long by $2\frac{3}{4}$ in. deep and 1 in. thick. You can cut this from 1 in. block or cement two 4 in. by $2\frac{3}{4}$ in. pieces of $\frac{1}{2}$ in. sheet together (the latter will be spare from the material used for cutting out the bulkheads). Mark out and cut the block to profile shape first (traced off the side elevation drawing). Then mark the deck shape on the top face and the bottom shape on the bottom face and finally trim down the block to the correct wedge shape as shown in Fig. 5.

9. The bow block is cemented to the hull bottom. Fill the saw cuts made in the deck with cement, crack bend to shape and cement the deck in place, as shown in Fig. 6. Bending should close the notches and squeeze out surplus cement. Finally, cement in two lengths of soft $\frac{1}{2}$ in. square balsa on each side, as shown. It does not matter if these do not conform exactly to the curve of the bottom at the bow end as you can fair them off later, but if you use *soft* $\frac{1}{2}$ in. square you should be able to follow the curve very closely.

10. At this stage, it is necessary to install the motor and wiring for the battery. A medium power motor of cylindrical shape is advised as this will be easiest to accommodate in the rather restricted motor compartment (between bulkheads 4 and 5). The motor must be lined up with the propeller shaft, using a standard flexible coupling as a connection. Use wedges cut from scrap balsa to line up the motor correctly and, if necessary, cut away the hog (this will be necessary if the motor is more than 1 in. diameter). The motor can then be permanently fixed with a strap of thin aluminium secured to the $\frac{1}{2}$ in. square strips on each side. No mounting details are shown on the plan since these will vary with the type and size of motor used. Mounting should, however, be fairly obvious, provided you work on the principle that the motor should be blocked up to the correct angle with scrap balsa, similarly wedged so that it cannot move sideways and then finally secured with a simple strap or other means.

The space between bulkheads 3 and 4 is the battery compartment. The batteries can simply lay in this compartment, held in place with plastic foam packing. A switch should be fitted to the underside of the deck immediately in front of the hatch cut-out. Complete *all* the wiring at this stage, i.e.

(i) one lead from motor to switch
(ii) one lead from the other side of the switch to the battery connection
(iii) one lead from the other side of the motor to the other battery connection.

Both leads to the motor are taken through bulkhead 4. Seal these holes with cement after passing the wires through.

11. You are now in a position to add the sides to complete the basic hull assembly. These sides are cut from $\frac{1}{4}$ in. sheet balsa, but first fair off the assembly with glasspaper wrapped around a block to make sure that the sides will fit snugly. For example, bulkhead 1 will need fairing off to conform to the curve of the deck and bottom at this point. It is very important that you do fair off the main assembly properly as a good fit for the sides is essential to ensure a watertight hull.

For the sides you need two 36 in. panels of 4 in. by $\frac{1}{4}$ in. medium balsa which are fairly flexible and can be bent end to end. Avoid quarter-grain sheet which is still and rigid. It is also advisable to glue the sides in place with Cascamite rather than balsa cement as this is fully waterproof adhesive, whereas balsa cement is not. The slower drying time of Cascamite will also ensure that there are no 'dry' spots when you have finally positioned the sides.

Before you start gluing up, first cut the $\frac{1}{4}$ in. sheet to the bow profile shape—i.e. just shape the first 6 in. of the sheet—the rest you can leave unshaped. Offer the two sides up and chamfer the inside faces slightly for a really snug fit in front of the bow block. You are now ready for gluing up.

Apply adhesive generously to all the joint faces, position the sides at the front and clamp in place. Then clamp or pin down over the rest of the hull length. Leave for several hours to set (in the case of Cascamite, leave overnight).

12. All that now remains to be done to complete the hull is to carve and sand to final section. Study the three typical section drawings on the plan to see the shape required. The deck plan is left absolutely flat, with the top of the sides just rounded into it. The bottom of the hull, on the other hand, is well rounded off.

The bottom of the stern is trimmed to the concave outline shown on the plan and then rounded off on the underside. The transom is also rounded off. Work to what appears to be a pleasing shape.

After sanding smooth the hull should then be given several coats of sanding sealer, sanding down again between each coat, until you have got a really smooth, almost glass-like finish. Fill any dents or surface imperfections with filler paste as you proceed. When finally satisfied that the hull is as smooth and even as you can get it, give several coats of medium grey *flat* paint or dope. After the final coat has been allowed to dry for at least twenty-four hours, stick masking tape around the colour line marked on the plan and paint the hull bottom matt black (one coat).

Next month: the finishing details and fitting-out.

The Ceiling Walker

THIS model has been specially designed for indoor flying in any reasonable size room. When released after winding up the model should climb straight up, helicopter fashion, until the 'spike' mounted on the upper rotor hub hits the ceiling. The model should then stay in this position until the power has run out, when it will start to wobble and descend. Of course, the higher the room the better as the model can then achieve a longer 'free flight' time. If the room is high enough, in fact, you should be able to adjust the power of the rubber motor so that the model will climb slowly to ceiling height, remain there for a few seconds and then descend very slowly, still under power.

Construction is very simple. Start by making two bearings from 20 gauge dural sheet, as shown in the detail sketches. If you cannot find any dural, 20 gauge brass strip will do, provided it is reasonably hard (e.g. the brass terminal strips off an old $4\frac{1}{2}$ volt flat battery).

Prepare the stick by chamfering off each end at an angle, as shown, and then bind the bearings in place with cotton. Finally secure with a generous coating of balsa cement round the bindings.

The two hubs are both 1 in. long, cut from $\frac{1}{8}$ in. by $\frac{3}{16}$ in. balsa strip (or scrap $\frac{3}{16}$ in. sheet balsa). Note how these are saw cut at an angle to produce slots into which the rotor blades fit—and how 'opposite' angles are used on the top and bottom hubs. This is quite easy to do, but if the saw cuts do not work out accurately, cut another hub and try again.

The rotor blades are cut from $\frac{1}{32}$ in. sheet balsa to the pattern shown—i.e. a 3 in. by $1\frac{1}{4}$ in. panel of $\frac{1}{32}$ in. sheet will make two blades when cut as shown. The blades are then coated with cement at the inner ends and pushed into the hub slots to complete the two rotors. Note how the bottom of the blades should be horizontal—i.e. the complete rotor can be lined up by laying over a flat surface once the blades have

Continued on page 25

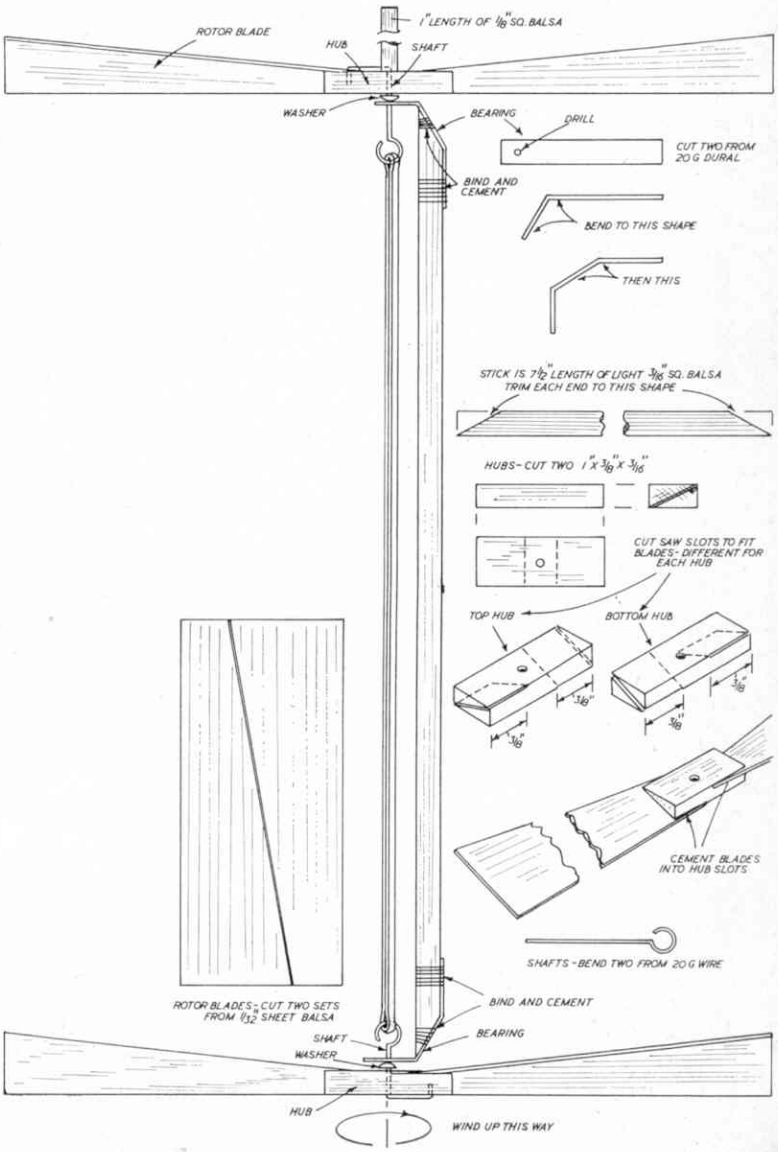

Flipper - The MM Sub Part 2

by Ron Warring

WE now come to the finishing details and fitting out the 'M.M.' submarine ready for her trials. The hull, which was completed in part (i), is divided into six watertight compartments, only one of which (the battery compartment) is accessible via a hatch. Just in case any leakage should develop we want to be able to drain these compartments. This is particularly necessary in the case of the motor compartment where leakage may take place up the stern tube.

A hole is bored in the deck above each compartment for drainage purposes. Do not try to drill these holes. Use a length of $\frac{1}{2}$ in. diameter metal tubing sharpened at one end and pierce the holes with a twisting motion—Fig. 7. The position of these holes is shown on the plan view drawing given with part 1.

Each hole is then plugged with a cork, cut down to $\frac{1}{2}$ in. length. Choose the length of cork cut to ensure a really tight fit. To enable the corks to be withdrawn when pushed down flush with the deck, bend a loop in a short length of 20 s.w.g. wire, pass the wire through the cork and then turn over the end on to the bottom of the cork. Paint the tops of the corks and the wire loops grey and, when dry, press them in place.

The main hatch is covered in a different way, using part 9 cut from $\frac{1}{8}$ in. marine ply to the bottom of which is cemented a 'plug' of $\frac{1}{2}$ in. sheet balsa. This fits into the deck cut out, allowing part 9 to sit flush with the deck. However, to get a proper seal a gasket of similar shape to part 9 (but with a cut out to fit over the plug part) is cemented to the bottom of part 9 with Bostik. This gasket is cut from $\frac{3}{32}$ in. or $\frac{1}{8}$ in. soft neoprene rubber sheet. The complete assembly is shown in Fig. 8. Note that this hatch cover fits over the two lengths of studding which protrude from the deck and is then secured with two 4 BA wing nuts. Tightening down the wing nuts squashes the gasket into close contact with the deck and produces a positive watertight seal. At the same time the hatch can be removed at any time—e.g. it will have to be removed to switch the motor on, and also to replace batteries. Although it may seem a little awkward having to unscrew and then replace the hatch every time to switch the motor on, this does provide positive waterproofing of the switch and electrics which can never be assured with a deck mounted switch, especially as the model is intended to operate under water as well as on the surface.

The ply hatch also forms the base to which the conning tower is cemented. The conning tower design has been kept very simple. Outline shapes are shown on the full size plan and details in Fig. 9. It is carved from a balsa block 3 in. long by $3\frac{1}{2}$ in. by 2 in. You do not need to buy a block this size. You can build it up from pieces of $\frac{1}{2}$ in. sheet left over, glueing together with Cascamite.

The top part is hollowed out, Part 10, cut from $\frac{1}{8}$ in. ply, is cemented in place to form the gun platform which is completed by sticking brass pins into the ply and then soldering on a brass wire handrail, as shown. The gun is made from dowel and scrap ply pieces, assembled as shown. Mounting the gun on a dowel enables it to be swivelled.

After completing the conning tower and cementing it to the top of the hatch (part 9), give this whole assembly two or three coats of medium grey flat paint.

The twin bilge keels are $22\frac{1}{4}$ in. lengths of $\frac{3}{8}$ in. by $\frac{3}{16}$ in. spruce, which are cemented to the bottom of the hull on about the mid point of the rounding—see section drawing B-B on the main plan. These are not essential and can be omitted, if desired, but they will assist in helping the sub run straight and true on the surface in a crosswind or cross sea. Be sure that they are lined up accurately fore and aft, otherwise they will have a steering effect.

The $\frac{1}{8}$ in. square hardwood strip cemented to the underside of the bows represents the cable cutter on a full size sub. On the model it serves the main purpose of protecting the bow against accidental damage. It will have to be steamed to the curve and is best cemented in place with Cascamite rather than balsa cement. The notches can be cut with a file after fitting, or omitted entirely. They add to the scale appearance but can prove troublesome in catching and trapping weed when the model is operating.

Both the bilge keels and the cable cutter are painted black after fitting.

The stanchions and handrail should be fitted to the deck as these greatly improve the appearance of the model. Single ball plastic stanchions can be used, or large plated pins (preferably brass pins). The handrail can be a length of thin nylon or thread, or thick fuse wire. If using pins for the stanchions, the handrail can be secured to each pin with a dab of epoxy resin adhesive.

Only a minimum of deck fittings are needed to impart a realistic appearance. These can be restricted to six bollards, positioned as shown on the main plan; and a gun on the foredeck which can be made from dowel and ply scraps. The gun should be mounted on a circular base drilled out to be a tight fit on a short length of $\frac{3}{16}$ in. hardwood dowel cemented into the deck. Stanchions, handrail and gun should all be painted grey.

The rudder assembly comprises both a vertical rudder (for directional control) and a horizontal rudder (for trim control). Two alternative methods of making this assembly are shown in Fig. 10. In one, a conventional rudder is fitted in a tiller tube passing through the hull. The horizontal rudders are then cut separately from 18 gauge brass sheet and bolted or riveted to the vertical rudder, as shown. The whole group turns as one for steering, via movement of the tiller. Trim control is obtained by bending the horizontal rudders.

In the alternative method the horizontal rudder is cut from 18 gauge brass sheet and screwed to the bottom of the hull above the vertical rudder, with additional brass wire bracing. The vertical rudder is then fitted as a separate unit.

The hydrovane assembly is shown in Fig. 11. A thick walled brass tube is fitted in the hull and well cemented in place to prevent leaks. This carries an 18 gauge steel wire arm, bent as shown in Fig. 12 with two $\frac{7}{8}$ in. lengths of brass tube slipped to the side arms before making the final bend. A vertical wire arm is soldered to one side just outside the hull tube; and a washer to the other side.

The hydrovanes are cut from $\frac{1}{16}$ in. ply to the dimensions shown in Fig. 12. These are then *sewn* to the $\frac{7}{8}$ in. lengths of 18 gauge tube on the wire arms. They are thus hinge mounted and can be folded up vertically. To hold in their normal horizontal position for running they are simply held out by a small rubber band engaging with the end of the wire arm, as shown.

The hydrovanes provide automatic 'dive' and 'surface' control, which works as follows. The vertical wire carries a small disc cut from plastic

7

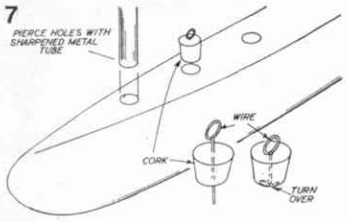

8

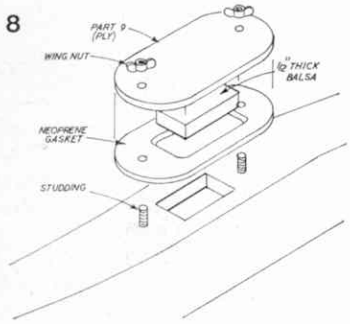

9

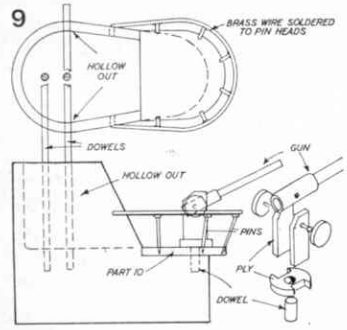

10

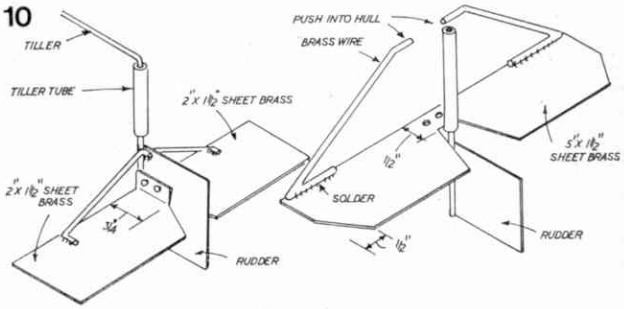

11

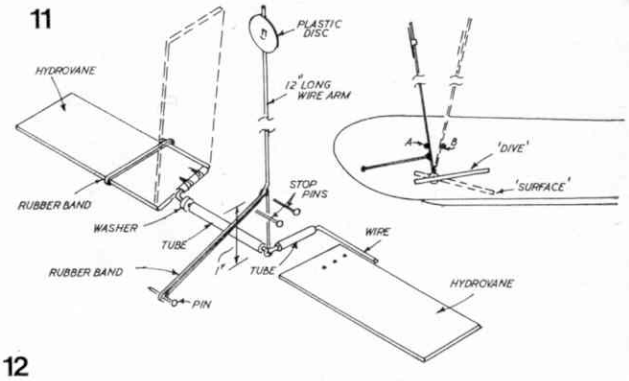

12

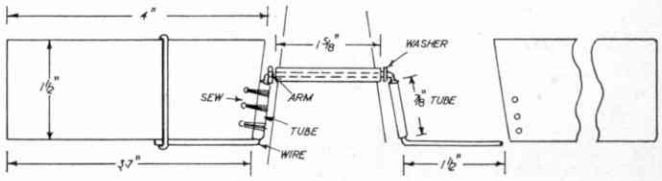

material, pierced to mount on the wire but free enough to be slid up and down. This wire is kinked about 1 in. up from its pivot point and a rubber band is taken from this kink and fastened to the hull side with a pin. A further pin 'A' is then pushed into the hull side to act as a forward stop, limiting the 'dive' position assumed by the hydrovanes. This pin position, and the position of the pin anchoring the rubber band which controls the band tension can only be determined by experiment.

A second stop pin 'B' is then pushed into the hull side to limit the backward movement of the arm, and thus the 'surface' position of the hydrovanes to approximately the same, but opposite angle, of the 'dive' trim. As the model submerges and continues to dive the small disc on the end of the wire arm will eventually sink below the surface. It will immediately be subject to water pressure which will cause the arm to pivot back and bring the hydrovanes to the 'surface' position. With adjustment of band tension, stop pin positions and the height of the disc on the wire arm an automatic trim position can be found where the model will run just below the surface with the disc partly submerged.

Initial trials should be carried out in a bath of water. Make sure that the hatch is securely clamped down, then put the model in the water. It will probably float laying to one side and at an awkward angle. Ballast weight is needed to establish a proper trim, this forming the ballast keel which is screwed to the bottom of the hull. The exact amount of weight required can only be found by trial and error, but a fair amount of weight will normally be needed.

The best material for the ballast keel is strip lead (i.e. lead sheet cut into strips about 1 in. wide); or bars of plumbers' solder (the latter being obtainable from any ironmonger's shop). Simply add enough lead strip (of solder bars) until the model floats level and with the decks almost awash. The ballast keel can then be attached permanently with woodscrews of sufficient length to pass through the balsa bottom and up into the obeche hog.

Trimmed in this condition—decks nearly awash—the model should submerge satisfactorily under the action of the hydrovanes when driven forward by the propeller, but you will need a stretch of open water to try this. Start with only a very small 'dive' trim on the hydrovanes and gradually increase. To be on the safe side you can let the model trail a light line so that you can haul it back if it gets into trouble. It will take a little time to sort out the best trim and get the automatic hydrovane control working effectively. The idea is to get a good diving performance without having to use so much ballast weight that the model is nearly submerged in the static position. The more powerful the motor the higher the model can float in the water with initial trim.

Of course, for surface running only, you need considerably less ballast weight; and under these conditions the hydrovanes can be folded up against the hull sides and held with a rubber band. Find how much difference in ballast keel weight you need to change from 'surface running' to 'diving trim' conditions and make that amount of weight detachable (e.g. you can fit that section of weight on bolts or studding screwed into the hog). You can then run your model under either conditions, simply by removing or adding the additional 'diving trim' weight from the ballast keel.

Once properly set up, the automatic hydrovane control will 'fail safe'. That is to say, if the rubber band breaks and the model continues to dive, the hydrovanes will revert to 'surface' trim as soon as the disc on the wire arm has submerged, if not before. It is advisable to change this band at fairly regular intervals, however.

After every outing, particularly when the model is new, it is also advisable to remove all the bungs to open up each compartment and check that no water has got in. *Always* open up the motor compartment after each period of use and drain, if necessary, as water may have worked up the stern tube. If the hatch gasket does not appear to be sealing perfectly and this cannot be cured by tightening down the wing nuts more strongly, seal around the edge of the hatch with waterproof grease before putting the model into the water.

You may also think it advisable to carry a 'wreck' buoy on your model. This can be a large cork tied to a length of thread strong enough to haul the model ashore. The other end of the thread is secured to the hull. Drill a hole in the deck above the bow block to pile the thread into and then lightly glue the cork over the top with *water soluble glue*. If the model submerges and fails to rise again—it could get trapped by weed, for instance—the glue will gradually soften and eventually let the cork break away and bring the line to the surface. Once you can reach the cork you can retrieve the model.

Radio Control

A SUBMARINE presents some rather different problems for radio control compared with other models, but is still a perfectly practical proposition. The first—and obvious—requirement is that the radio gear must be contained in fully sealed compartments. The only access to the interior of our model is to the engine compartment via the removable conning tower hatch—and a position close to the motor is just where the receiver does *not* want to be. It needs building in to a forward compartment where it can be completely sealed off and as far from the electric drive motor as possible to eliminate interference. As a further precaution the drive motor should be *suppressed*. This can be done quite simply by connecting a 0·01 microfarad condenser across the motor terminals—or, better still, one condenser from each terminal connected to the casing of the motor (provided this is metal) and the motor casing then connected by a further wire soldered to the stern tube.

The receiver should be located in its own compartment and positioned so that its tuning control can be reached via the removable drain plug in that compartment. This is important as you can only tune the receiver properly when the model is in the water (although this does not apply in the case of superhet equipment).

The aerial can also be fitted to this compartment—or the one immediately aft—and should comprise a wire 'whip' mounted in the deck in a suitable fitting, such as a brass bush. The complete aerial wire and the base fitting should then be *insulated* with plastic sleeving. This is to prevent the aerial being 'earthed' when the model submerges. The receiver should then respond to transmitter signals as long as there is any portion of the aerial still above water. Thus if a 3 ft. whip aerial is used the model can be submerged to a depth of about 30 in. or so and still maintain control.

Now let us consider what controls can be utilised, and what safeguards can be used should the model submerge too deeply with loss of radio contact. First and foremost the model must be trimmed with positive buoyancy—i.e. deck just awash, so that in the event of the motor stopping when submerged it will rise to the surface. It is also advisable to keep the control systems employed as direct as possible.

This means that for single channel radio it would be best to consider just *one* control only. The choice here is (i) motor on-off control; or (ii) diving vane control.

With *motor control* the front vane can be rigged to 'dive' trim and fixed in this position. Radio signal 'on' should then be arranged to switch the motor on, so that the signal has to be *held* on to keep the motor running. The model will then dive and continue diving until loss of signal (e.g. when the aerial is fully submerged, or the transmitter signal is released). This is a 'fail safe' system, but it does not give very good control.

With *diving vane* control the front vanes should be biased by rubber band tension to 'surface' trim. The radio signal is then used to drive the vanes to the 'dive' position via a suitable actuator. Release or loss of signal then retrims the model for surfacing. This is rather better than motor control since the motor keeps running all the time and, with practice, the dive signal can be switched on and off to maintain submerged running. It is also 'fail safe' again for in the event of loss of radio response the model is automatically trimmed for 'surfacing'.

Of course, you can also use the automatic 'dive' control as on the free running model and use the radio for controlling rudder or motor stop-start (or forward-stop-reverse, although there is little scope for running a submarine astern). This, in fact, is probably the *safest* system for single-channel control, and there is no reason in this case why motor switching *and* rudder should not be controlled by a single actuator like the Graupner Kinematic; or main and secondary actuators.

Whatever system you decide to employ, a *motorised* actuator should be used, not an escapement (although the Kinematic is an exception). An actuator to drive the rudder (and/or motor switching can be located in the compartment immediately behind the drive motor compartment. For working a rudder control the tiller tube will have to terminate *inside* the hull to bring the tiller arm forward into the aftermost compartment. This will be a potential source of leakage, so make sure that this compartment is completely watertight and sealed off from the compartment with the actuator in it. It should also be drained regularly through its removable drain plug.

With multi-channel radio far more scope is offered, and a six-channel outfit can give complete control, viz:

(i) Two channels operating the forward vanes via a progressive action actuator giving a complete dive trim control.

(ii) Two channels switching the motor via a suitable actuator; or, preferably, giving *variable* motor speed via a progressive type actuator driving a potentiometer.

(iii) Two channels controlling the rudder, either with self-neutralising action or progressive, as preferred.

The main snag with this set-up is that there is no 'fail safe' provision. The required 'emergency' action is to be able to stop the motor so that the submarine will rise to the surface under its own positive buoyancy. Loss of radio contact with the six-channel system described will merely leave the motor running in the last 'control' condition. A separate 'fail safe' arrangement is therefore necessary, working on the motor circuit.

In this case a similar form of 'mechanical' control can be used as on the free running model. For example, a vertical wire pivoted in the deck and fitted with a small plastic disc can be used to operate a microswitch in the motor circuit, cutting off the motor supply and thus stopping the motor when the disc is submerged and the wire is pushed backwards. Instead of a separate wire you can even use the aerial wire for this purpose, i.e. using a fairly stiff wire for the aerial and putting the plastic disc on this. The aerial must be pivotally mounted at the bottom so that when it is moved backwards it operates a microswitch cutting off the motor supply circuit.

The main difficulty with either method is that by introducing a pivoted joint on the deck for the wire (or aerial) an opening is produced in the deck, as the switch must obviously be mounted inside the hull. This opening must be completely sealed without interfering with free pivotal movement of the wire. The best way to do this is to make up a small 'gaiter' or flexible plastic sheet which covers the opening completely and is also firmly bound to the emerging wire.

Turn to page 33 for plans and building instruction for a basic Hovercraft