HOW TO CARVE WOOD PROPELLERS

Propeller carving is something of a lost art in these days of plastic mouldings —but for the best performance from a rubber-powered model there's nothing to compare with a carved prop. These step-by-step instructions show the basic technique for conventional carving of a two-bladed prop. You can use it for single- or two-blade folding props. as well, in any size.

For freewheeling props, choose a medium hard to hard grade of balsa so that you can carve the blades quite thin and still retain adequate strength. For folding props, use a lighter grade of balsa, leave the hub 'square' and fit the hinge before cutting the blades free of the hub at the hinge line.

Exactly the same technique can be used for carving props in other woods, but choose a wood which is reasonably light, easy to carve and has a good straight grain. For flying models, always carve propellers from balsa as hardwood props are too heavy.

1 For any given diameter, block *width* should be about $\frac{1}{8}$th of the *diameter*. Mark off in quarters, as shown, with pencil or ball point pen

2 Complete marking out as shown in this diagram. As an additional guide for accurate cutting it is recommended that all four faces of the block be marked out

3 Use a stiffback saw to cut the ends of the block to taper, as shown. These cuts must be made accurately and a fretsaw is likely to 'wobble'

4 Now make vertical saw cuts down to the hub position and then chisel out the three parts shown, using a very sharp knife or rigid carving blade

5 Turn the block on edge and make vertical sawcuts down to the plan width of the hub. Chisel out the three portions marked on each side very carefully

6 This completes the *propeller blank* ready for carving. The accuracy of your final propeller depends on how accurately and squarely you have made the cuts to this stage

7 Start by carving the *back* face of one blade, aiming for a slightly undercambered (concave) surface from hub to tip. Note which *way* to carve for a conventional (tractor) propeller

8 Turn the blank round and carve the back face of the other blade. Check that the amount of undercamber on each blade is the same by using a straightedge laid from LE to TE

9 Now turn the blank over and carve the front face of one blade, aiming to end up with a good aerofoil section. Blade thickness should taper from a maximum at the hub to quite thin at the tip

10 Turn the blank round and carve the front face of the second blade. At this stage you can rough sand down with fairly coarse sandpaper, middle 2 grade.

11 Trim the outline of the blades to a suitable shape, making sure to get each blade the same. Work all over the propeller with sandpaper to finish the blade and form the hub

12 Fix a bush in the hub, then balance the prop on a piece of wire. Sand down the heaviest blade until the prop balances horizontally. Finish by clear doping (4 coats)

The actual width of a propeller blank is not critical, but the ratio of the thickness to the width governs the propeller pitch. As an approximate guide, width should be about equal to diameter/8, but it is usually more convenient to work to standard balsa block widths to save unnecessary cutting. Suitable widths are:

10 in.—width $1\frac{1}{4}$ in.
12 in.—width $1\frac{1}{4}$ in.
14 in.—width $1\frac{3}{4}$ in.
16 in.—width 2 in.
18 in.—width 2 in.
propeller diameter:
6 in—8in.—width $1\frac{1}{4}$ in.

If you want to calculate the pitch of your propeller instead to using approximate guide above, then

$$\text{pitch} = \frac{1 \cdot 57 \times \text{diameter} \times \text{thickness}}{\text{width}}$$

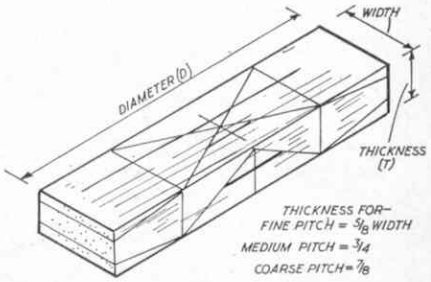

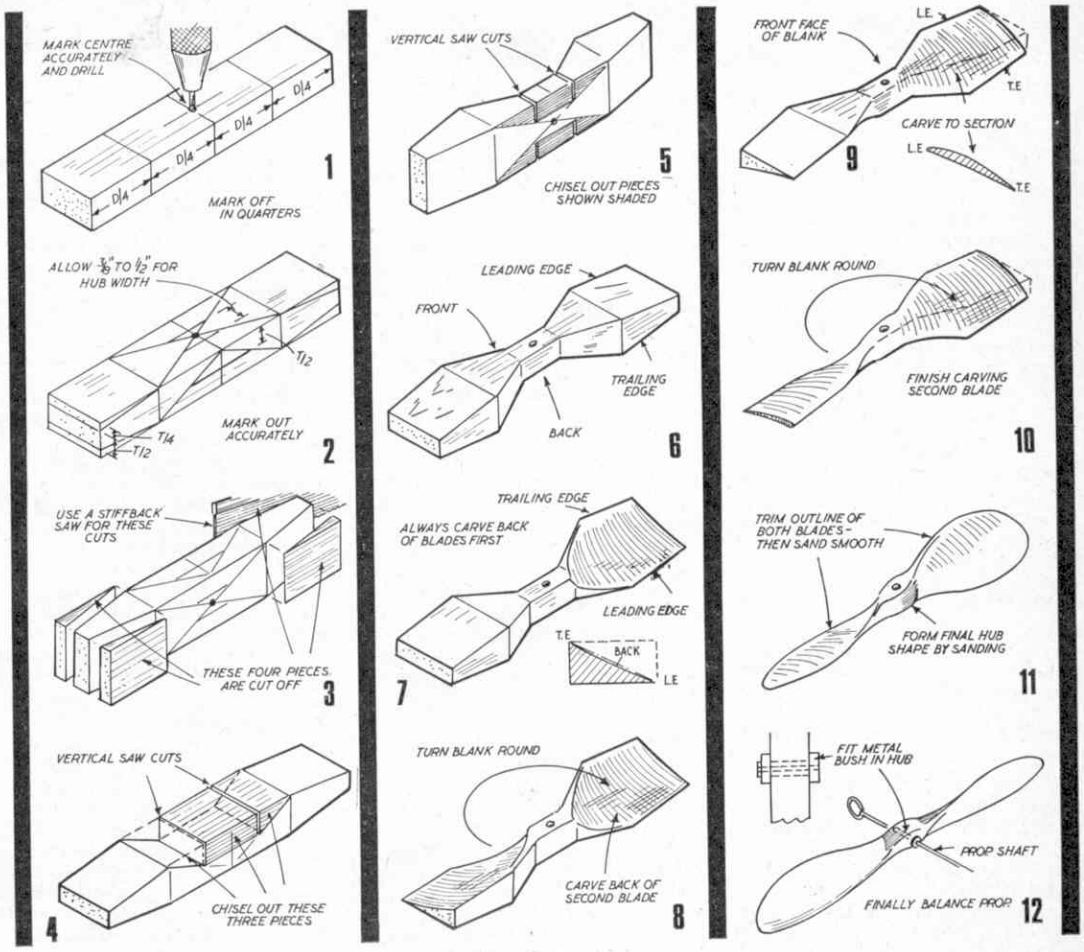

British Rail... on the road

By Spanner

I KNEW them as "Mechanical Horses and Trailers". A Liverpudlian colleague remembers them as **'Lecies'**. Nowadays, I've heard them unromantically described as 'Three-wheel Articulated Lorries', but whatever they were or are called, their correct title has always been 'Scammell Tractor and Trailer'.

In case you're a bit puzzled by this rather mysterious beginning, I should explain that I'm talking about those highly distinctive British Rail articulated delivery wagons, seen on most roads in Britain at one time or another, the towing unit for which is provided by a 3-wheel Scammell Tractor. Fast trains may be able to carry goods quickly from one depot to another, but it still needs a road-vehicle to deliver them right to your door!

British Railways have been using these Scammell vehicles for certainly as long as I can remember, and for a very good reason —they meet all their requirements. To begin with, they have only one steerable wheel which makes them considerably less complicated than a 4-wheel unit and thus cheaper to produce. This single wheel also makes them tremendously manoeuvrable. They can be coupled to any suitable trailer, be it open flat-bed or enclosed box van, and they are extremely economical in operation.

The manufacturers, Scammell Lorries Limited, are not of course owned by British Rail. They are an entirely separate concern producing all sorts of equipment, and the 'mechanical horse' is just one of their many products. Over the years several different versions of this particular vehicle have been produced, the most widely-known being the Scammell Scarab which the railways have been using for a very long time. The Scarab, however, is now being superseded by the new Scammell Townsman, roughly similar in design to the Scarab, but generally more modern-looking and advanced. The Townsman makes an excellent subject for the Meccano model-builder to work on and, because of this, we have chosen it as a prototype for the new Meccano Model described below.

The Tractor

Dealing first with the tractor, a chassis is built up from a 5½ in. by 2½ in. Flanged Plate 1, to one side flange of which a 5½ in. by 2½ in. Flexible Plate and two 5½ in. by ½ in. Double Angle Strips 2 are bolted. The free lugs of these Double Angle Strips are connected by a 2½ in. Strip. Fixed to each end flange of Plate 1 are a 5½ in. by 1½ in. Flexible Plate 3 and a 3½ in. by 2½ in. Flexible Plate 4, overlapped three holes and edged along the bottom by a compound 8 in. strip. This strip is obtained from a 5½ in. Strip 5 and a 3 in. Strip 6.

A 3½ in. Angle Girder 7 is now bolted to the upper edge of Plate 3, at the same time fixing a 4½ in. Strip 8 in position. Strip 8 is connected to Strip 5 by a 2½ in. Strip 9 and a 1½ in. Strip 10, the upper Bolt securing Strip 10 also holding a 2½ in. Stepped Curved Strip 11. The rearmost ends of Girders 7 at each side are joined by a 5½ in. Strip 12, to which a further two 3½ in. Angle Girders 13 are bolted. At its forward end, each Girder 13 is connected to corresponding Girder 7 by a 1½ in. Strip, while, at its rearmost end, its vertical flange is connected to corresponding Double Angle Strip 2, also by a 1½ in. Strip. The rear mudguards are represented by a compound 3½ in. by 1½ in. flexible plate, obtained from two 2½ in. by 1½ in. Flexible Plates, bent to shape and attached to Curved Strip 11 by an Angle Bracket.

Another two 2½ in. Strips 14 are bolted to Flexible Plate 4, to represent a side panel, at the same time securing two Obtuse Angle Brackets in place. A further two Obtuse Angle Brackets 15 are added, as also is a 2½ in. Strip 16, then a 3 in. Narrow Strip 17 is bolted through its third hole to each Bracket 15. Fixed between Plates 4 at each side is a 5½ in. Curved Strip 18, attached to the Plates by Angle Brackets.

Each plate 4 is, itself, extended forward by a 3½ in. by 2½ in. Triangular Flexible Plate 19, at the same time fixing an Angle Bracket in place at the top. Bolted to this Angle Bracket is a 3½ in. by 1½ in. Triangular Flexible Plate 20, overlayed by a 2½ in. Curved Strip 21, then Curved Strips 21 at each side are connected by a 1½ in. Angle Girder 22. Attached to the vertical flange of this Angle Girder is a

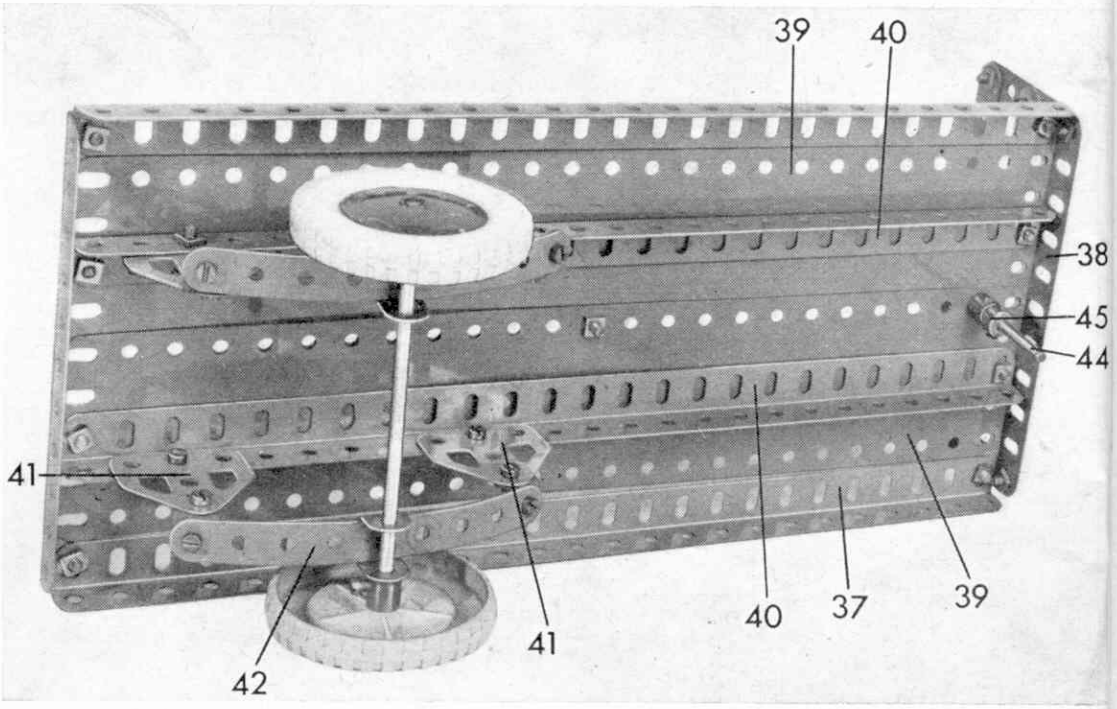

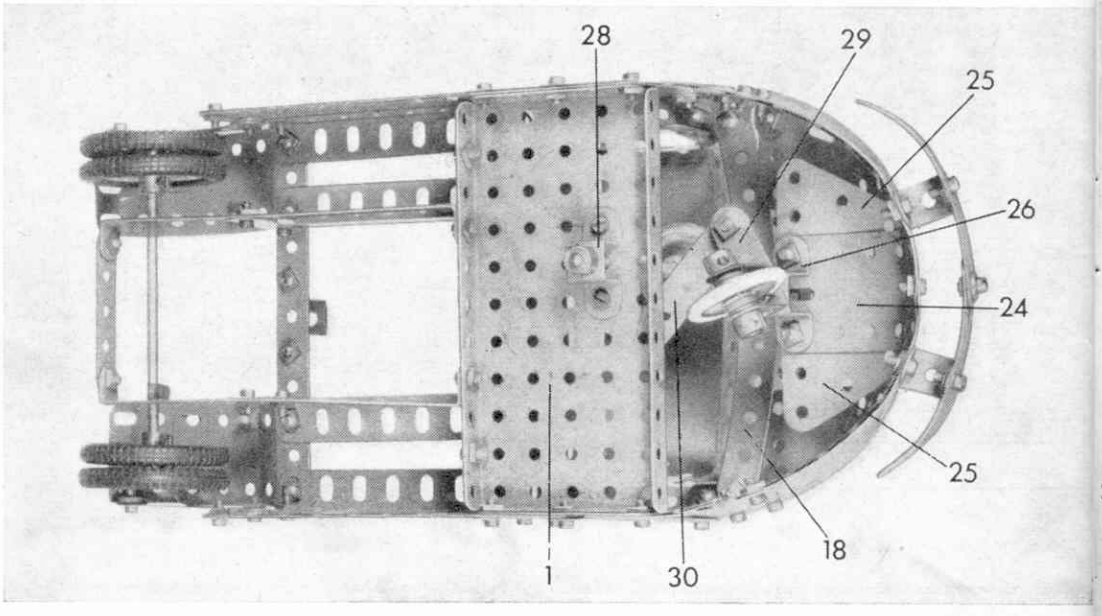

2½ in. Flat Girder 23, to the lower edge of which two Angle Brackets are bolted. A 2½ in. by 1½ in. Flexible Plate 24 and two 2½ in. by 1½ in. Triangular Flexible Plates 25 are secured to these Angle Brackets, as shown, at the same time fixing a Double Bent Strip 26 in position beneath the Brackets. All the Plates at the front are bent to shape and bolted to two 4 in. Stepped Curved Strips 27, attached to Strips 6. Two large and two small Washers are fixed to Flat Girder 23 to represent headlamps and sidelamps, while a bumper is provided by two Formed Slotted Strips, bolted together and attached to Curved Strips 27 by Double Brackets.

Steering

Before completing the cab, it is best to fit the steering gear. A Double Bent Strip 28 is bolted to the underside of Flanged Plate 1 to provide a bearing for the steering column, which is a 3½ in. Rod carrying a 1 in. fixed Pulley with Rubber Ring at its upper end, a Crank immediately above the Flanged Plate, and a Collar beneath Double Bent Strip 28. Lock-nutted to Double Bent Strip 26 by a ⅜ in. Bolt is a 1 in. by ½ in. Double Bracket, to the top of which a 1½ in. Strip 29 is fixed. The other end of this Strip is lock-nutted to a 2½ in. Strip 30 which is, in turn, lock-nutted to the Crank fixed on the steering column. Journalled in the end holes of the Double Bracket is a 1 in. Rod carrying a 1 in. loose Pulley with Rubber Ring between Washers, and held in place by two Collars.

The cab can now be completed by bolting a shaped 5½ in. by 2½ in. Flexible Plate 31 between Narrow Strips 17 at each side, at the same time adding a 2½ in. Narrow Strip 32. Two 4 in. Stepped Curved Strips 33, overlapped seven holes, are attached to the front edge of Plate 31, then the windscreen is provided by a 5½ in. by 2½ in. Transparent Plastic Plate, edged along the top by a 4½ in. Narrow Strip and connected to Curved Strips 33 by an Angle Bracket. At the back, the sides of the cab are joined by a 4½ in. Strip 34, attached by Angle Brackets, and the remaining space is enclosed by three 2½ in. by 1½ in. Flexible Plates, remembering to leave a small space to represent the rear window.

Twin rear wheels, arranged in two sets of two, are fitted to the model, each wheel consisting of a 1½ in. Pulley with Motor Tyre 35. The wheels are mounted on a 5 in. Rod, journalled in Double Angle Strips 2 and held in place by Spring Clips. A third Double Bent Strip 36, bolted to the centre of 5½ in. Strip 12, serves as the coupling point for the trailer.

The Trailer

If you are acquainted with the full-size vehicle, you will know that the tractor is sometimes used to tow an open flat truck and, at other times, can be seen towing a completely enclosed box-van trailer. We have decided to feature the former type here, but you may like to design and build your own, different version. To build our trailer, however, a rectangle is obtained from two 12½ in. Angle Girders 37, joined at each end by a 5½ in. Angle Girder 38. Two 12½ in. by 2½ in. Strip Plates 39 are then bolted between Girders 38, at the same time fixing another two 12½ in. Angle Girders 40 in position. Attached to each of these Girders 40 are two Flat Trunions 41, through the apex holes of which Angle Brackets are fixed. A 4½ in. Strip 42 is curved and bolted to the free lugs of these Angle Brackets to act as a spring, then a Double Bracket is secured to its centre. The holes in the lugs of the Double Bracket provide the bearings for a 5 in. Rod on which two 2½ in. Road Wheels are mounted. Great care must be taken to see that the holes in the Double Bracket lugs are exactly in line, otherwise the Rod will not turn.

A 2½ in. Strip 43 is bolted through each end hole of the front Girder 38, then Strips 43 are connected, as shown, by two 5½ in. Strips. Finally, a coupling pin is provided by a 1½ in. Rod 44, mounted in a Rod Socket and carrying a Collar 45 to act as a spacer when the trailer is coupled to the tractor.

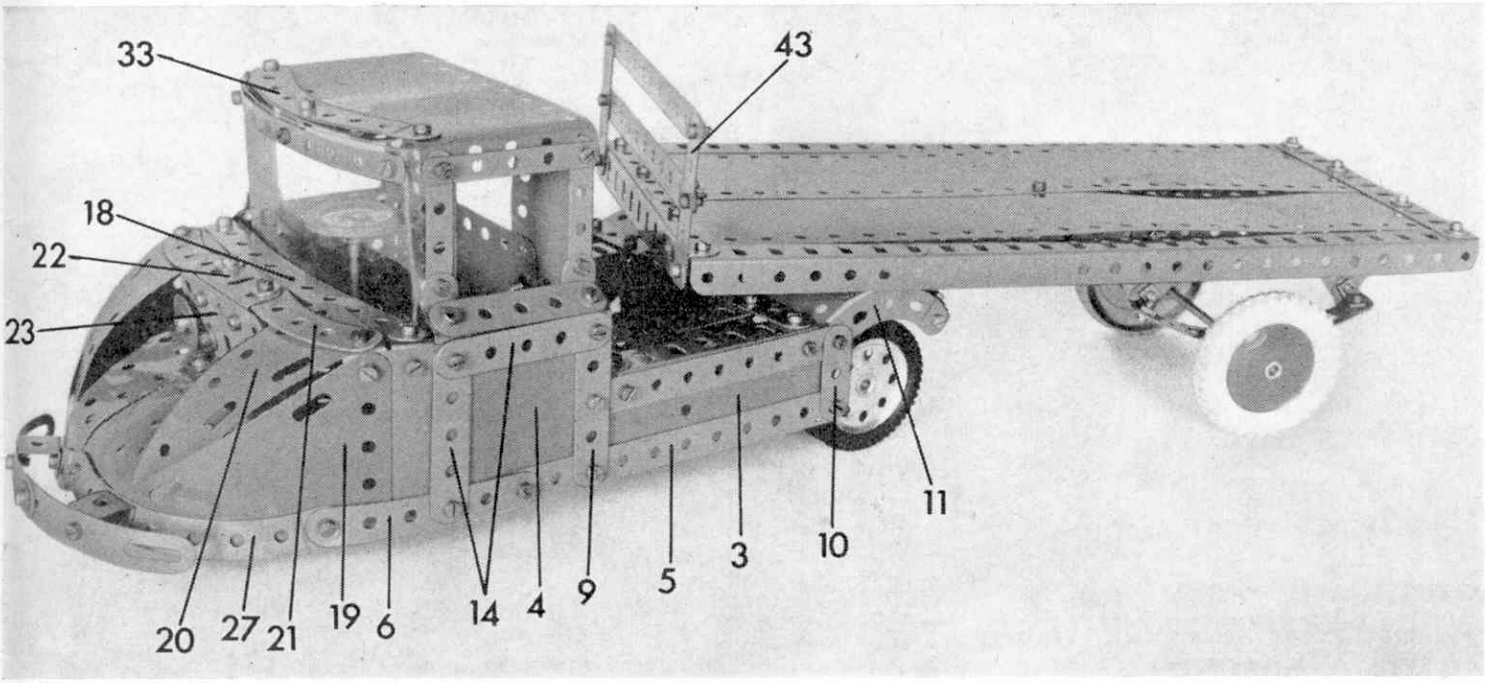

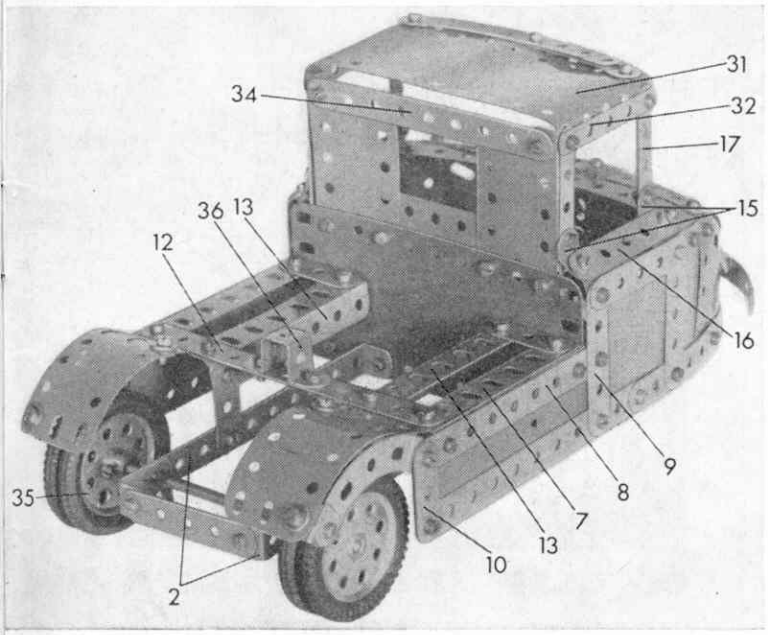

Parts Required

5 of No. 2	1 of No. 52
5 of No. 2a	4 of No. 59
2 of No. 4	1 of No. 62
12 of No. 5	1 of No. 89
5 of No. 6a	2 of No. 89b
4 of No. 8	2 of No. 90
2 of No. 9	2 of No. 90a
4 of No. 9b	1 of No. 103f
1 of No. 9f	3 of No. 111c
4 of No. 11	4 of No. 126a
1 of No. 11a	4 of No. 142d
14 of No. 12	2 of No. 155
8 of No. 12c	1 of No. 179
2 of No. 15	2 of No. 187
1 of No. 16	8 of No. 188
1 of No. 18a	2 of No. 189
1 of No. 18b	2 of No. 190a
4 of No. 21	2 of No. 192
1 of No. 22	1 of No. 193e
1 of No. 22a	2 of No. 197
2 of No. 35	2 of No. 215
126 of No. 37a	2 of No. 221
120 of No. 37b	2 of No. 224
22 of No. 38	2 of No. 226
2 of No. 38d	2 of No. 235
3 of No. 45	4 of No. 235a
2 of No. 48d	1 of No. 235d