Fast Building, Fast running

Dolphin 16

Part 1: The Hull

Build it from this months free plan by Ron Warring

Build it as a powered inboard or outboard or as powered twin outboard. Part 2 will deal with finishing and painting the model. Part 3 will cover engine installation and fitting out.

THE Dolphin 16 is a very popular cabin cruiser made by Brooklands Aviation suitable for both inboard or outboard power. Our model is a faithful replica—1/12th actual size—and like the full size craft you can build it to take either an inboard or outboard motor —or twin outboards, if you like!

The plan sheet shows a side view and plan view of the complete model, with all necessary parts which have to be cut out to shape shown full size. These patterns should be traced off the plan and transferred to the appropriate size balsa for cutting out. Consult the MATERIAL LIST for a general cutting guide.

First thing you have to do is decide whether you want to build an inboard or an outboard powered model. This is because the hull is assembled around a keel member which has to be cut and 'strapped' to take a sterntube if you are going to use inboard power. Alternatively, you can prepare the keel for *inboard* power and blank off the stern tube hole with a piece of ¼ in. sq. balsa and then complete the model for *outboard* power. If you want to change over to inboard power later you have only got to remove the ¼ in. sq. from the keel to fit a sterntube. You might even want to try running the model on both an inboard and an outboard motor together!

The first part to cut and make is the keel. Transfer the pattern shown on Plan A to ¼ in. balsa sheet and cut out carefully. Lay over the side view on Plan A and mark the bulkhead positions and check that the notch lines up with bulkhead 4 position—Fig. 1.

For an *inboard* powered model further work is needed on the keel, as shown in Figs. 2 and 3. You can ignore this and proceed straight to the next step if you are building an outboard powered version.

For inboard power the stern tube has to be fitted through the keel. Mark the position on the top and bottom edge of the keel, as shown in Fig. 2. Join these points to give a line representing the angle of the sterntube. Draw a parallel line the distance away equal to the diameter of the sterntube you intend to use and then cut out the portion between the two lines.

Now assemble as shown in Fig. 3 with the stern tube in place and two straps cemented to the sides of the keel to hold the whole lot together. Pin together so that the assembly sets accurately, noting that the straps should come exactly between bulkhead 3 and bulkhead 4 positions. You can cement the stern tube in place permanently at this stage, but this is not recommended. Withdraw it before the cement sets. You can fit the sterntube finally when the hull is completed as this will make it easier to line up properly with the motor. It will also make assembly of the hull easier if the sterntube is not sticking out.

Cut four 14 in. lengths of soft ¼ in. sq. balsa sheet, noting that in the case of bulkhead 3 you will have to join two pieces of 3 in. wide sheet to get the necessary height—see cutting list. Note also that with the inboard

1 With a sheet of carbon paper between the plan and the balsa wood, the bulkhead patterns are easy to transfer by simply following the outline with a hard pencil. Use a ruler for the straight lines

2 Cuts which run with the grain can easily be made with a sharp knife (turn to page 54 to find out how to get one just like ours absolutely free). Use a steel rule as a guide when cutting long 'straights'

3 Pre-bend the soft ¼ in. square balsa stringers as shown. Select a pliable grade of balsa and if you cannot bend it without cracking it, hold it in the steam from a boiling kettle gently bending it at the same time

4 Use fairly coarse sandpaper wrapped round a block of balsa to shape the stringers and bulkheads in preparation for the outer skinning. The sandpaper block is the most useful 'tool' of all as an invaluable aid to good building

5 Boat hull skins are often sharply curved towards the bows, this curve is best steamed into the wood before attachment to the frame—try it—its easy!

6 The bow blocks are shaped to profile as shown and held in place with pins until the cement sets—it will take several hours on such a big area. The plans specify two bow blocks, although the photograph shows our model with three smaller blocks joined together to build up to the same overall size. Carve and sand them to shape when quite dry

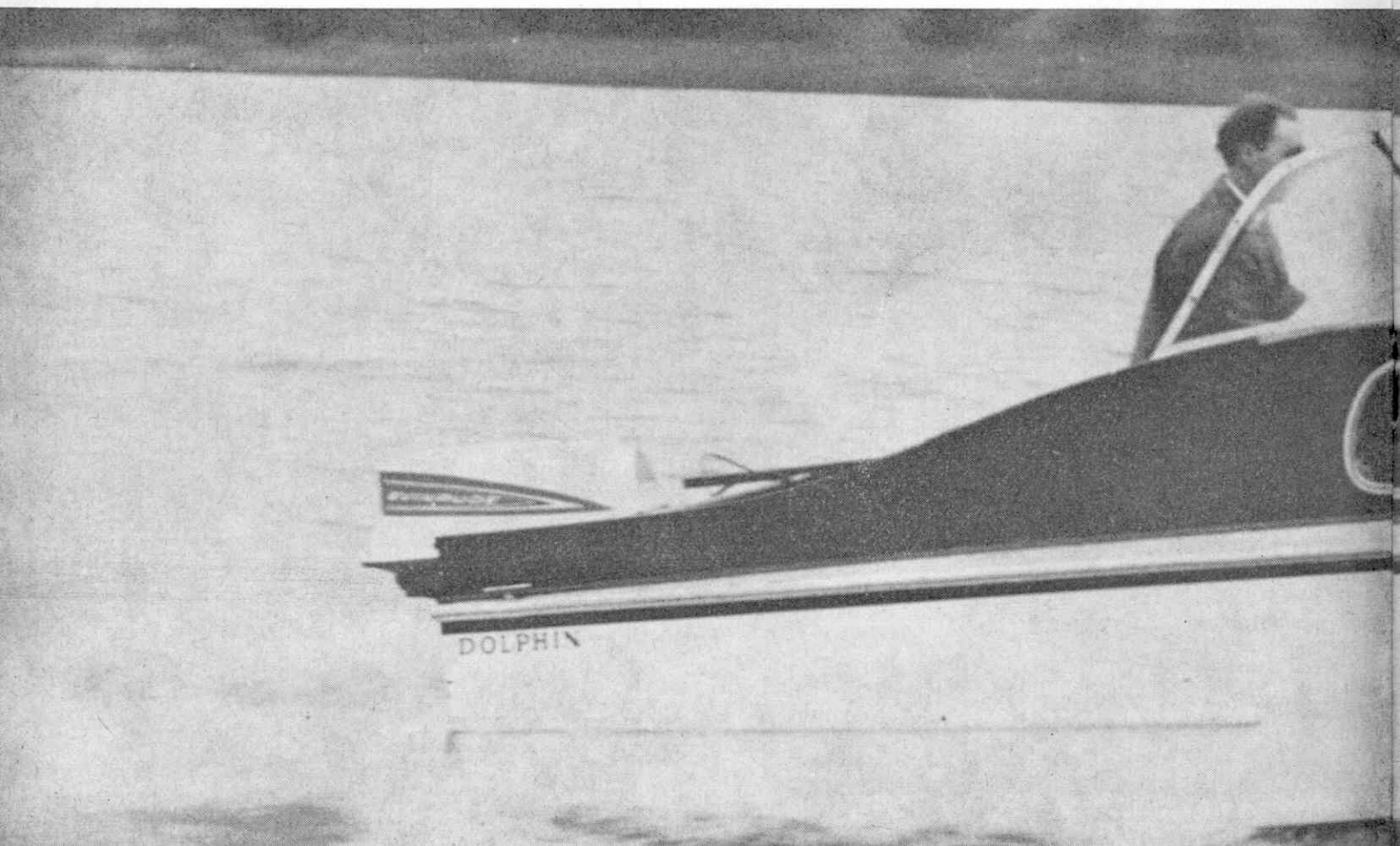

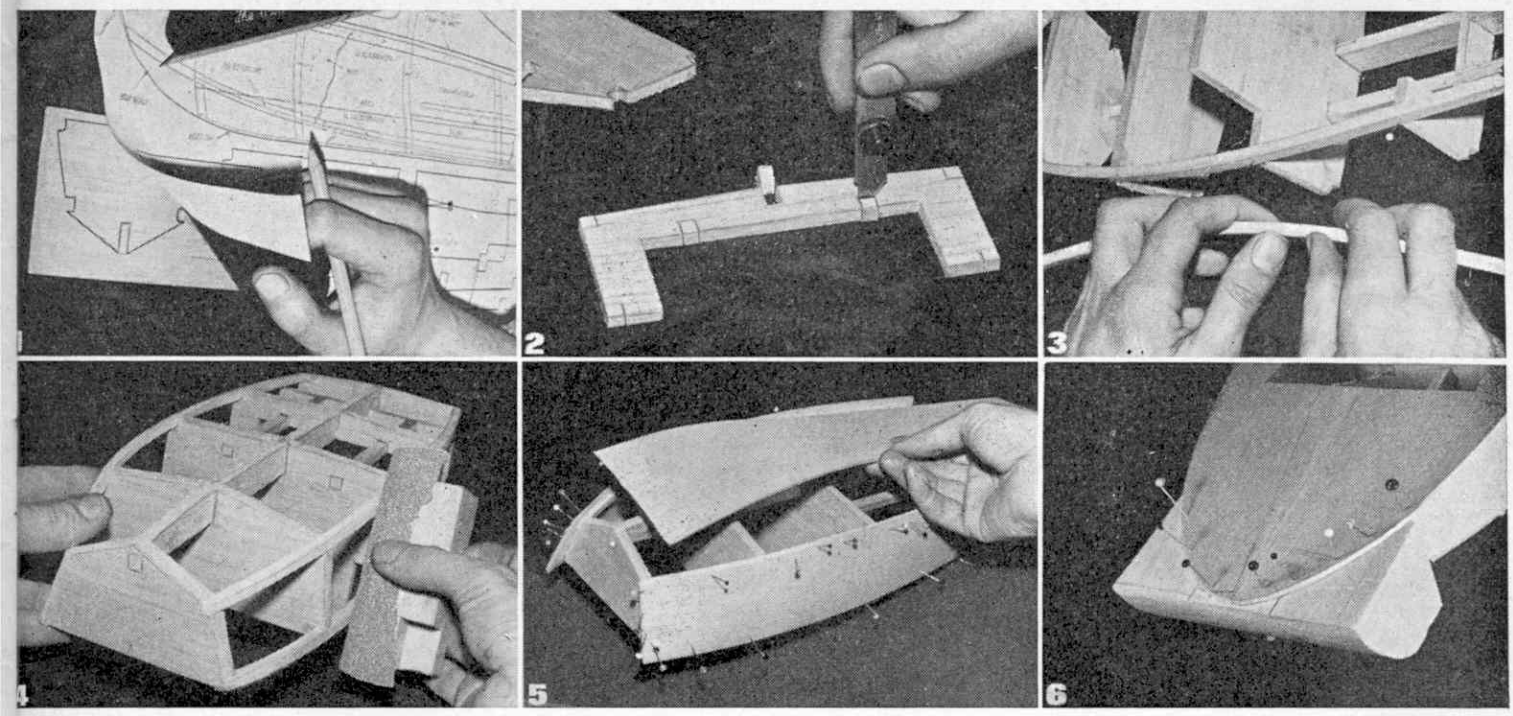

powered model the transom does not have a cutout—see Plan A. These are then cemented in place on to the keel, as shown in Fig. 4, noting particularly the angle of the transom (5).

Cut four 14 in. lengths of soft $\frac{1}{4}$ in. sq. balsa and cement to the notches in the top and bottom edges of the bulkheads—Fig. 5. These form the gunwale and chine stringers and need holding in place with pins until the cement has set. Do not push any of the bulkheads out of line when assembling these stringers.

Now cut and fit bulkhead 6 and add the two $\frac{1}{4}$ in. sq. beams which support the cockpit floor—Fig. 6.

The next stage is to fair off the sides of the framework with sandpaper wrapped around a flat block so that the side panels will fit snugly. The side panels are 14 in. by 3 in. by $\frac{3}{32}$ in. sheet balsa and you can check the amount of fairing off required by offering them up in place. When satisfied with the fit, cement in place and hold with pins until set. Be generous with the cement at this stage. If you have difficulty in bending the panels, the job may be simplified by pre-bending them in the steam from a boiling kettle.

When set, trim off surplus material from the side panels with a knife and fair in the bottom of the hull ready to receive the bottom panels. These are again 14 in. by 3 in. by $\frac{3}{32}$ in., fitted as shown in Fig. 8. Again hold with pins until set and then trim off surplus material. Note that when fitting up the bottom panels

the bottom edge which rests on the keel will have to be trimmed to shape. This is done by offering up in place, marking the cut required and then trying again. It may need several 'trial and error' attempts before you are satisfied with the fit.

The top should not need a great deal of fairing off, but sandpaper down as necessary until the edges of the gunwale stringers blend with the tops of the bulkheads. The top of the transom will have to be chamfered off slightly to compensate for the angle at which it is positioned.

The deck is cut from three panels of $\frac{3}{32}$ in. sheet balsa cemented together as shown on Plan A. Cut out slightly oversize, then cement and pin in position as shown in Fig. 9. When set, trim off flush with the sides.

The next step is to cut the sides from $\frac{3}{16}$ in. sheet, tracing the shape required off Plan A side view. Check that the bottom edge of these pieces exactly match the curve of your deck. If not, adjust as necessary with a sandpaper block. Parts 7 and 8 are cut from $\frac{1}{4}$ in. sheet balsa (Plan B). Cement the two cabin sides to the deck and bulkhead 3, as shown in Fig. 10, and complete the front end with parts 7 and 8 cemented in position.

Cut a panel $4\frac{1}{2}$ in. long by $4\frac{5}{8}$ in. wide from $\frac{1}{4}$ in. balsa sheet for the cabin roof and cement in place—Fig. 11. When set, round off the edges and front with sandpaper.

Cut the two square bow blocks from $2\frac{1}{2}$ in. sq. balsa and cement together. Trace on the profile shape from Plan A and cut the blocks to this shape. Check that this matches the curve of the deck by offering up in place—Fig. 12. When satisfied with the fit, cement the bow blocks in position and leave overnight to set. You can then carve and sand the bow blocks down to final shape, as shown in Fig. 13. If you are in a hurry, fit the bow blocks with impact adhesive—then you can start carving more or less right away!

Very little more needs to be done to complete the hull. Cut out the cockpit floor from $\frac{3}{32}$ in. sheet and cement in place. Cut and fit the well bottom and the two well end pieces to blank off the space between bulkhead 6 and the transom—Fig. 14. Finally, cement the three strakes to the sides. The top strake covers the deck/side joint; and the bottom (chine) strake the bottom/side joint. Use soft balsa which will bend easily to the shape required. The rubbing strake can be of hard $\frac{1}{8}$ in. sq. balsa, or obeche. If the hull is to be tissue or nylon covered it is best to add this strake after covering.

Finishing and painting the model will be dealt with in the next article.

MATERIAL AND CUTTING LIST

Bulkheads 1, 2, 3, 4, 5, 6, parts 7 and 8 cabin roof keel ..3 sheets 36 in. by 3 in. by $\frac{1}{4}$ in. balsa (note join one $6\frac{1}{2}$ in. length and one $4\frac{1}{2}$ in. length for bulkhead 3)

Cabin sides.....18 in. by 3 in. by $\frac{3}{16}$ balsa sheet

Deck.....36 in. by 2 in. by $\frac{3}{32}$ in.

Sides, bottoms, cabin floor.....2 sheets 36 in. by 3 in. by $\frac{3}{32}$ in. (one $5\frac{1}{2}$ in. length for deck)

Stringers, beams.....2 lengths 36 in. by $\frac{1}{4}$ in. sq. balsa

Bow block.....5 in. by $2\frac{1}{2}$ in. sq. balsa block

Gunwale strakes..... 36 in. by $\frac{3}{16}$ in. by $\frac{1}{16}$ in.

Chine strakes..... 36 in. by $\frac{3}{16}$ in. sq. balsa

Rubbers.....13 in. by $\frac{1}{8}$ in. sq. balsa or obeche

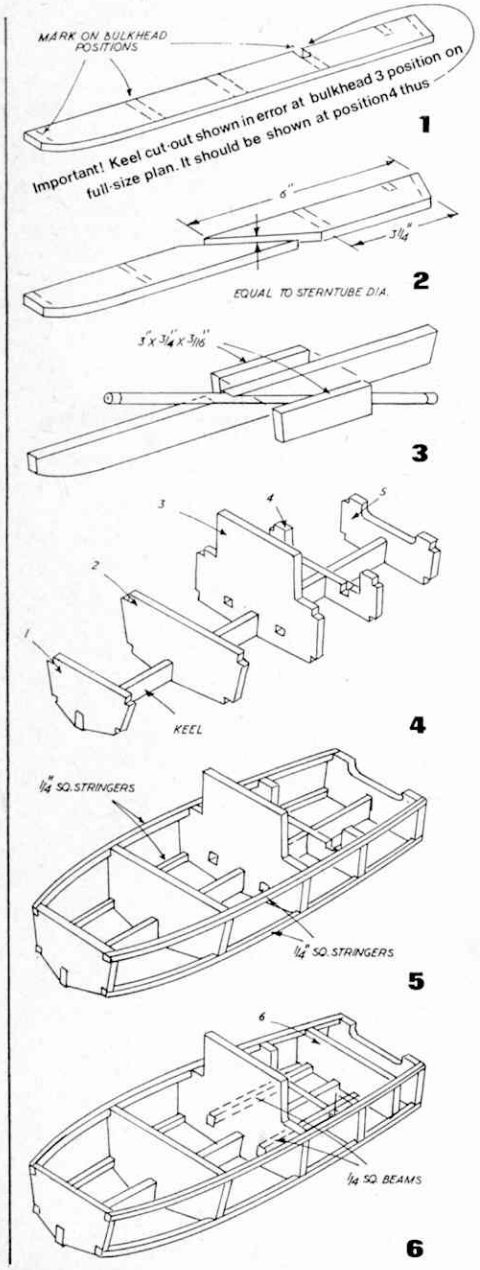

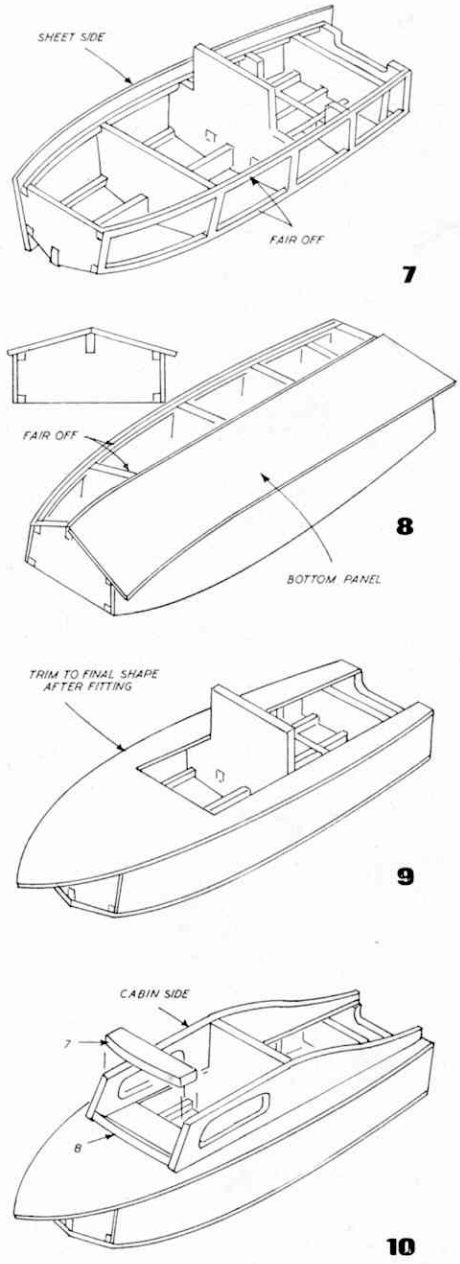

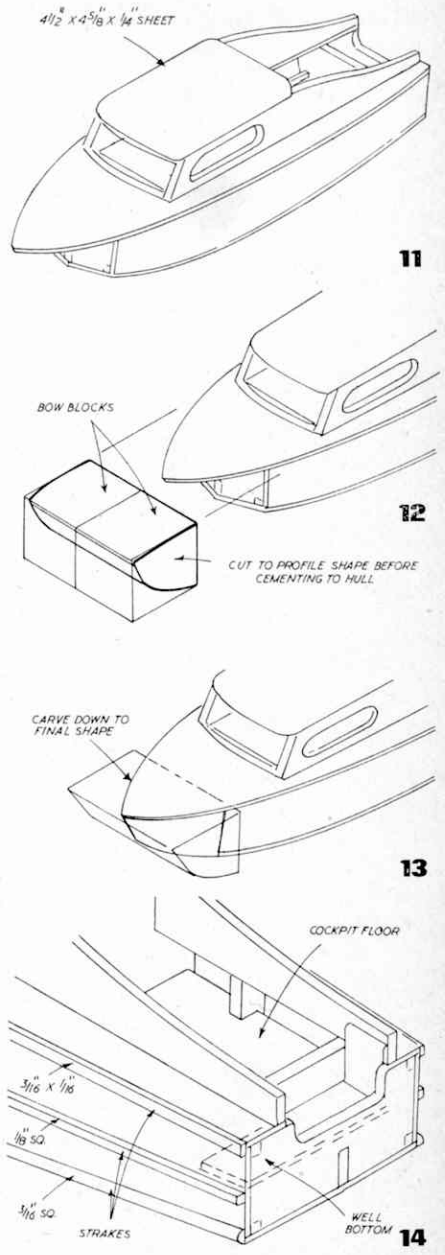

Dolphin 16—Finishing and Painting

Those of you who have started building 'Dolphin 16' from last month's free plan will now be nearing the painting stage. A good paint finish depends largely on good preparation. This month Ron Warring describes the process and we illustrate it with photographs of our own 'Dolphin 16' under construction. Next month:—Fitting out with inboard or outboard power.

THE best method of finishing an all-balsa hull is to cover it with thin nylon—the type of material sold for covering model aircraft. Alternatively, you can cover the hull with heavyweight 'Modelspan'. Procedure is the same in either case.

First the whole hull, including the deck, cabin sides and cabin top, should be sanded down perfectly smooth with fine sandpaper. The time spent on this will be well worth it from the point of view of finished appearance. Covering can then be applied using photographic paste or white office paste (e.g. Gripfix or Bondfix).

If using nylon for covering it is possible to cover the whole hull (sides and bottom) in one piece, if the nylon is thoroughly dampened first and then stretched in place. It will be easier to work with two pieces, however—one for each side and bottom, joining on the keel line. With tissue covering it will be easiest to cover in four pieces—one each for the two sides and two bottom panels.

In either case the whole surface of the hull to be covered must be coated with adhesive spread over it. Do not attempt to attach the covering to the edges only as this will only result in wrinkles. Then simply pull and smooth the covering in place.

The decks, cabin sides and cabin roof will also benefit from covering, using separate pieces of nylon or tissue for each, as this will give a much better paint finish. It is not *necessary* to cover these parts, however, You can just give them several coats of grain filler or sanding sealer, sanding down between each coat, if you prefer.

Almost any type of paint can be used to finish your model once covered—domestic enamel paints, model aircraft dopes or the new polyurethane paints. The latter are to be preferred as they give a high gloss and a most durable and waterproof finish. If your brush painting technique is poor, try using one of the aerosol type spray cans for getting a more 'professional' looking finish.

To conform to the full size boat, all parts should be painted. Typical hull colours are white or dark blue all over; or you can use a second colour for the bottom. Thus with a white hull,

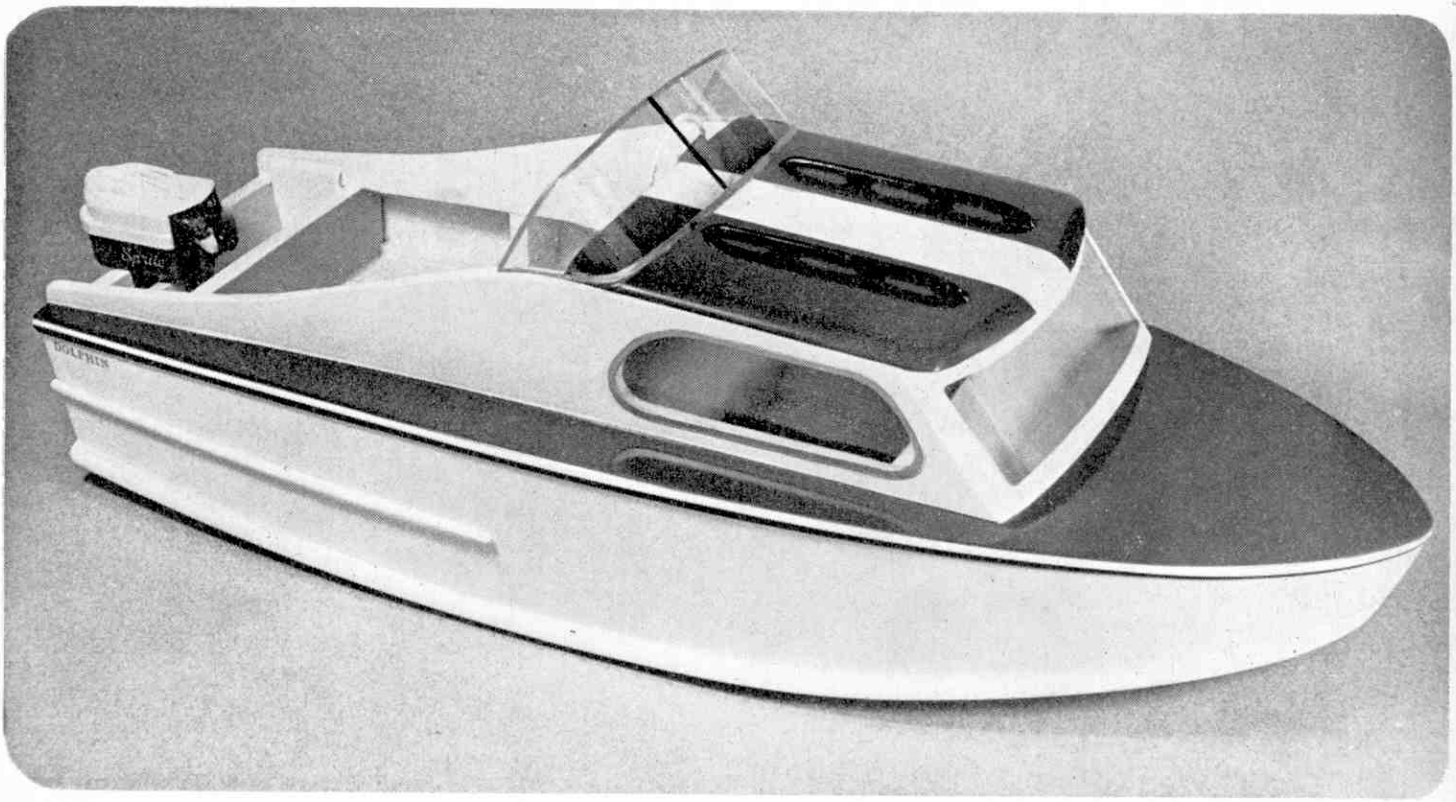

1 Here's the hull ready for covering and painting. Go over the entire structure with fine sandpaper wrapped round a small wood block

2 Now give the hull two coats of sanding sealer and allow to dry thoroughly

3 Gently rub down the sanding sealer with very fine sandpaper of No. 360 wet-or-dry paper (used dry)

4 Cover the whole hull with nylon or heavyweight Modelspan (model aircraft covering tissue). Lay the material over the hull and stick it in place with sanding sealer applied with a large brush *over* the tissue and rubbed *through* the pores, its a bit messy, but the resulting finish will be worth it!

5 Before painting the boat give the hull two more coats of sanding sealer and rub down with No. 400 paper until a silky-smooth finish is achieved. Paint the entire boat white, then, when dry, mask off the sides and cabin using Sellotape and paper. Spray the deck medium blue then remove the masking

6 Recess the window surrounds to the depth of the acetate sheet that you are using and cement the windows in position. Cut an 'overlay surround' in thin acetate, paint it silver on the outside surface *only* and then fix it to the window with film cement as shown

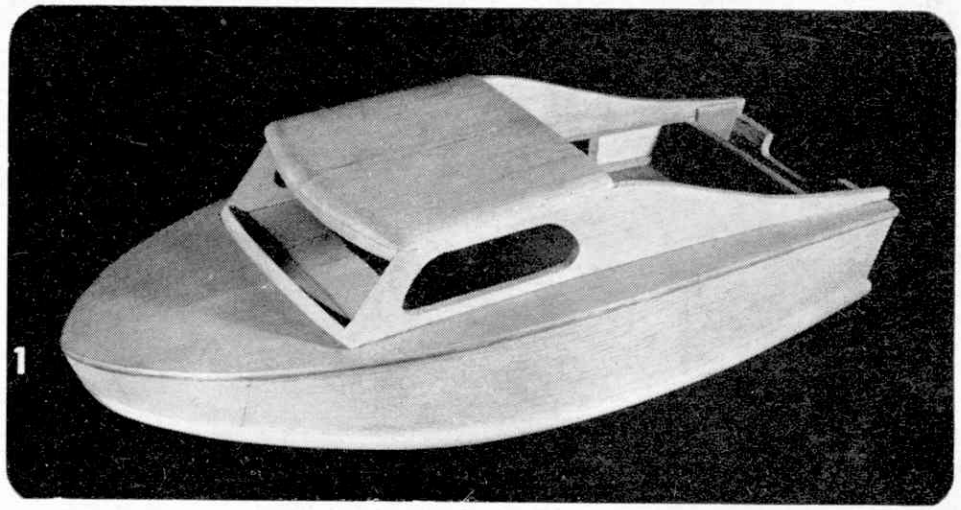

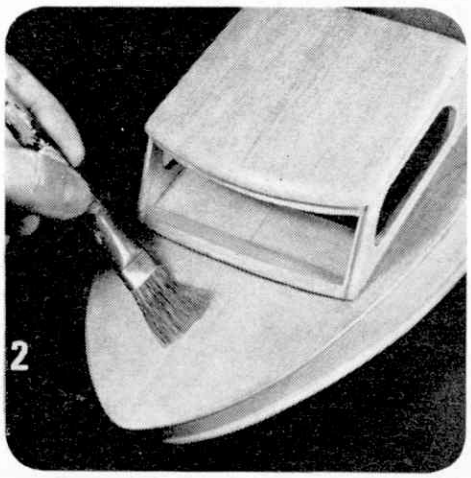

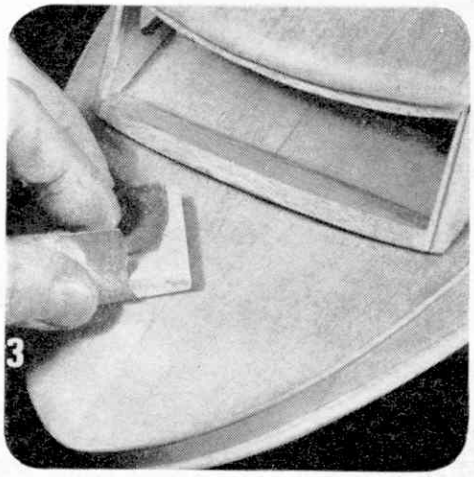

red, blue or green can be used as a bottom colour. With a dark blue colour for the sides a white bottom looks very smart.

Decks, cabin sides and cabin roof should be painted white. You can add your own ideas of colour scheming here, if you wish—such as a darkened cabin top colour or even a coloured deck with a white hull (*like ours, Ed.*).

Remember the insides of the cabin sides in the cockpit area should also be painted, together with both sides of bulkhead 6, the outboard well and the transom. The cockpit floor you can leave plain balsa. The face of bulkhead 3 *should* have a varnished mahogany finish, but this is difficult to achieve on balsa. If you stain the balsa with mahogany dye it will go too dark and streaky. It is best to cover this surface with a 'mahogany' paper—and you can often get enough as a free sample from a shop selling wallpapers!

Cabin glazing should be done after painting and finishing. Use clear acetate sheet for covering the cabin front and two side windows (neatest if cemented on from the inside, removing the cabin roof to do this). The windshield is bent to a curved shape by trial and error, fitting before being finally cemented in place.
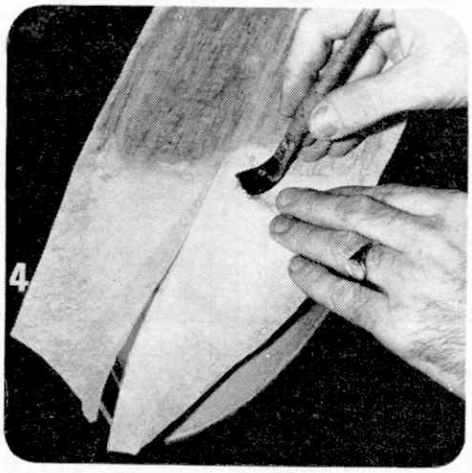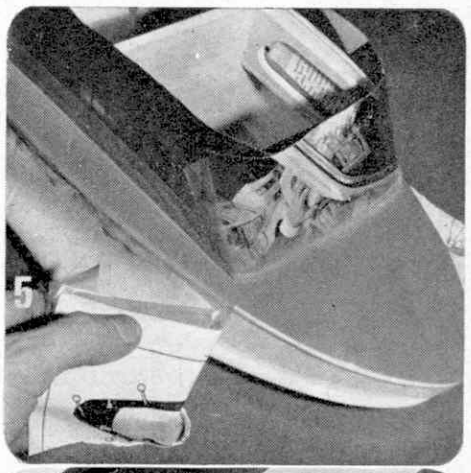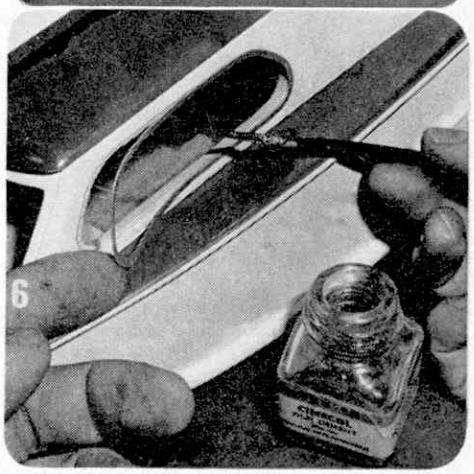
The grab rails on the cabin roof are essential scale fittings. You can add any other fittings you like, such as cleats, fairleads, etc. Use commercial plastic fittings, as these are most realistic, and inexpensive.