A NEW MECCANO MODEL

GIANT HAMMER-HEAD CRANE

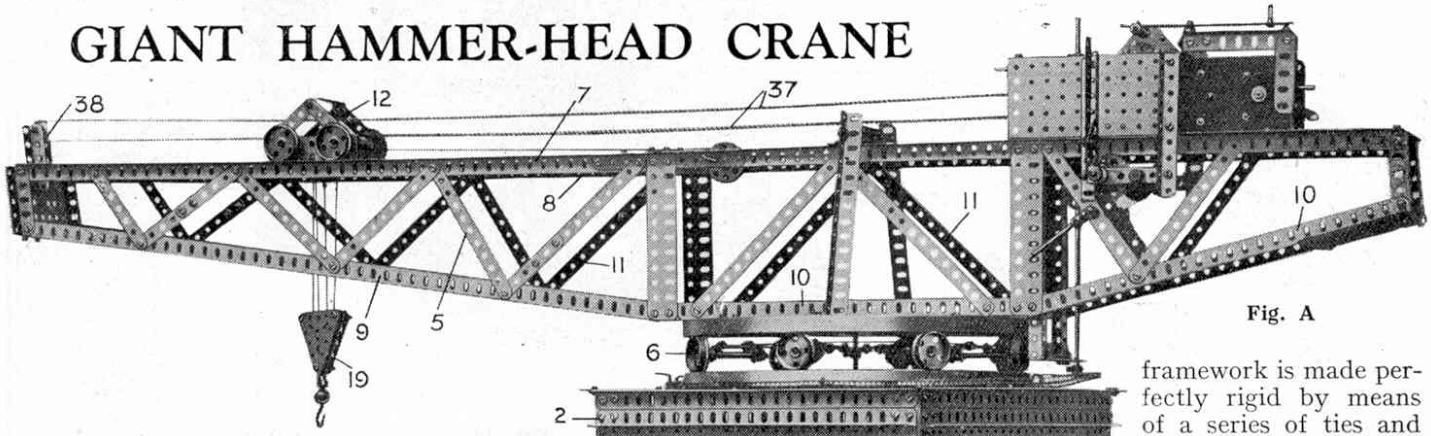

Fig. A

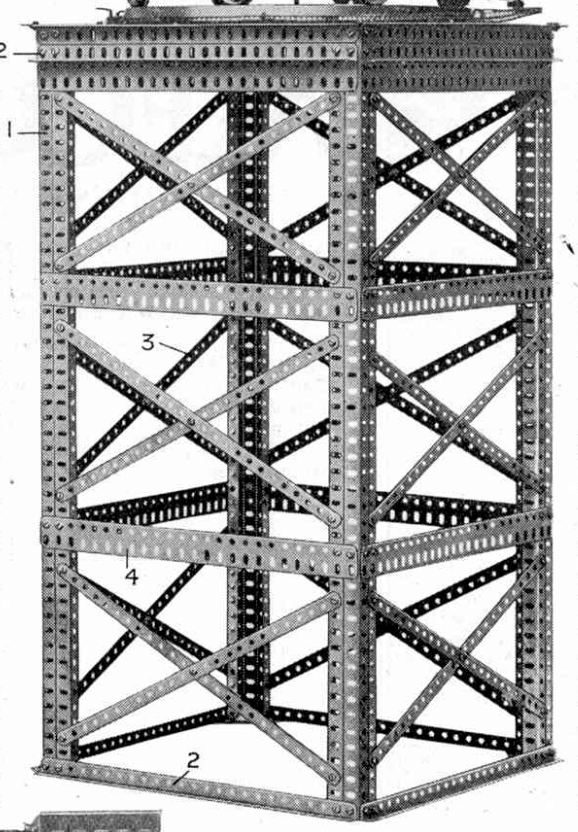

THIS model is an elaborate and very interesting example of the latest Meccano construction. The particular type of crane from which it has been designed is known as the "hammer-head"—a title easily explained from a glance at the general shape of the structure—and the realistic appearance of the model is well shown by comparison with the illustration (below) of a hammer-head crane in actual practice.

Hammer-head cranes are used in shipbuilding yards and other places where it is required to move heavy loads over a large radius; they have been specially adapted, also, to the construction of harbours, breakwaters, etc., and in this work they have proved their value in swinging into position the huge blocks of concrete, weighing tens of tons, which form so stout a defence against the might of the sea.

Building the Model

The main tower is of very massive construction and will withstand tremendous strain. Each corner member 1 is composed of three 24½″ Angle Girders, connected at top and bottom by 12½″ Girders 2. The framework is made perfectly rigid by means of a series of ties and struts consisting of 12½″ Strips 3 and Flat Girders 4. The upper platform is composed of a number of Flat Plates bolted to the projecting flanges of the top Angle Girders 2, and to further 12½″ Girders secured transversely in the tower.

The rotating arm, or boom, of the crane swivels upon roller bearings 6 mounted on the upper platform. The construction of the main pivot and roller-race is described in detail in "Meccano Standard Mechanisms"—the new Manual referred to in the Editorial page. Each side 7, 8 of the main boom is composed of two 24½″ Angle Girders butted together and secured by a 5½″ Girder at the centre. The lower portions of the frame consist of 24½″ Girders 9 and 12½″ Girders 10, braced by a series of ties and struts 5 and 11.

The three movements of the model—hoisting, racking and slewing—are driven and controlled from the Electric Motor and gear box secured upon the upper side of the boom. The Motor (12, Fig. B) is bolted to large Flat Plates 13 carried on the main girders 7, 8, while the sides of the gear box 14 are bolted directly to the girders 7 and 8. A general view of the driving mechanism and controls is shown in Fig. C.

The hoisting gear is operated as follows: the Motor, by means of a ½″ Pinion 15 (Fig. C) on its armature, drives a 57-teeth Gear Wheel secured to an axle carrying the 1″ Sprocket Wheel 16. This Sprocket Wheel is connected by a short Sprocket Chain to a similar wheel mounted on a Rod 17 (Fig. B), and a Pinion 18 secured to the latter drives a 57-teeth Gear Wheel 19 on the winding shaft 20. The hoisting-

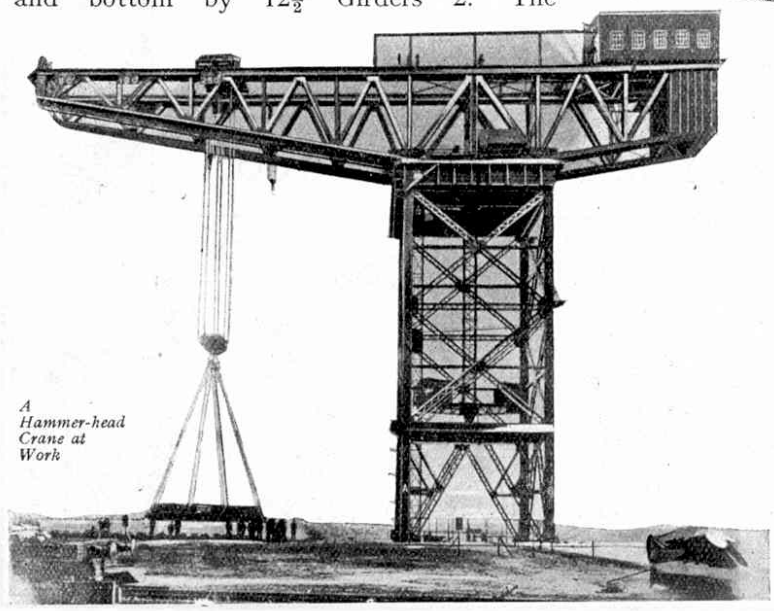

A Hammer-head Crane at Work

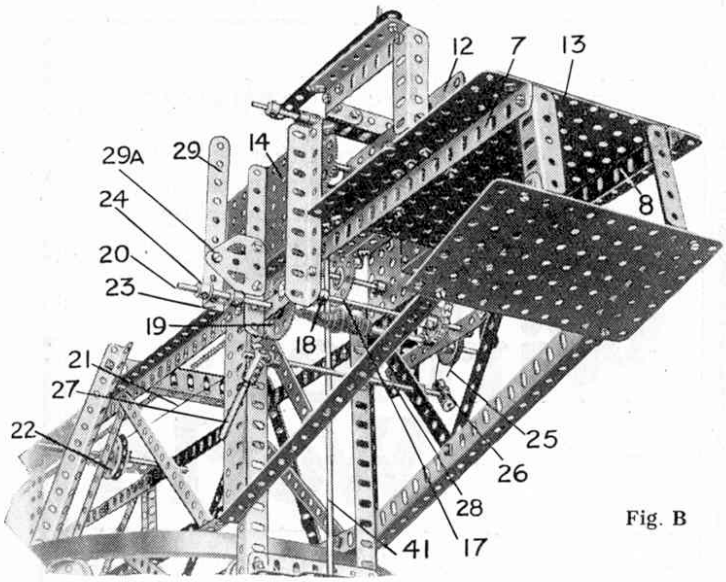

Fig. B

cord 21 passes from this shaft over a guide pulley 22, and over a sheave 1a in the traveller (Fig. D); from thence it is led round one of the sheaves of the two-sheaved pulley block 5, back round the other sheave 1a, then over the second-sheave in the pulley block, and is finally secured to a hole in a Bush Wheel 1. The Bush Wheels 1 do not revolve with the sheaves 1a.

The Gear Wheel 19 may be moved in or out of engagement with the Pinion 18 on operation of a lever 29; the latter is pivoted at 29a and engages the Rod 20 by means of a Double Bracket 23 mounted between Collars 24. The movement of the load is controlled by a friction brake consisting of a piece of cord 25 tied to the end of a Coupling 26, and engaging a 1″ Pulley secured to the winding shaft. The grip of the cord 25 about the Pulley is relaxed on lifting the lever 27, which consists of a short Rod attached to the shaft 28 carrying the coupling 26.

Rotating and Traversing Movements

The 57-tooth Gear Wheel (already mentioned) mounted immediately behind the Sprocket Wheel 16 on the shaft 42 (Fig. C), is driven by the Motor Pinion 15, and engages with a further ½″ Pinion secured to a short Rod journalled in the end of the Motor 12. The latter Rod carries at its other extremity a further ½″ Pinion meshing with a 57-teeth Gear Wheel 43 secured to the Axle Rod of two Bevel Wheels 44. This Axle Rod may be moved to and fro in its bearings on operation of a lever 45. The end hole of a Crank 32 is threaded on the axle, between the bosses of the Bevel Wheels 44, and is retained in its position by means of two or three Washers placed on either side of the Crank. The latter is secured to a Rod 31 sliding in Trunnions 46, and the lever 45, pivoted at 45a, rests between two Collars 30.

The Bevel Wheels 44 are so arranged on their shaft that, on moving the lever 45, one or other may be brought into engagement with one of the two further Bevel Wheels 33, 34, mounted on secondary shafts 47, 48. This type of drive-changing gear is described more fully under Standard Mechanism No. 69. Shaft 47 carries a Worm 35 driving a 57-teeth Gear Wheel on the Rod 36. A 1″ Sprocket Wheel 49 on this Rod engages a length of Sprocket Chain 37, which passes round a similar Sprocket Wheel 38 (Fig. A) at the outer end of the crane arm. The ends of the chain are attached to the carriage (or "traveller"); hence rotation of the Sprocket 49 moves the traveller to and fro on the girders 7.

The head of the crane is rotated about the roller-bearings 6 by means of the secondary shaft 48. This carries a Worm 39 engaging with the 57-teeth Gear Wheel 40 on the vertical shaft 41; the latter carries at its lower end a 1½″ Sprocket Wheel rotating in a Sprocket Chain which grips the circumference of the lower fixed guide of the roller-race (see S.M. No. 101).

It will now be seen that a slight movement of the lever 45 connects the main drive from the Motor with either of these two operations—rotating the crane or propelling the traveller 12 along the rails 7.

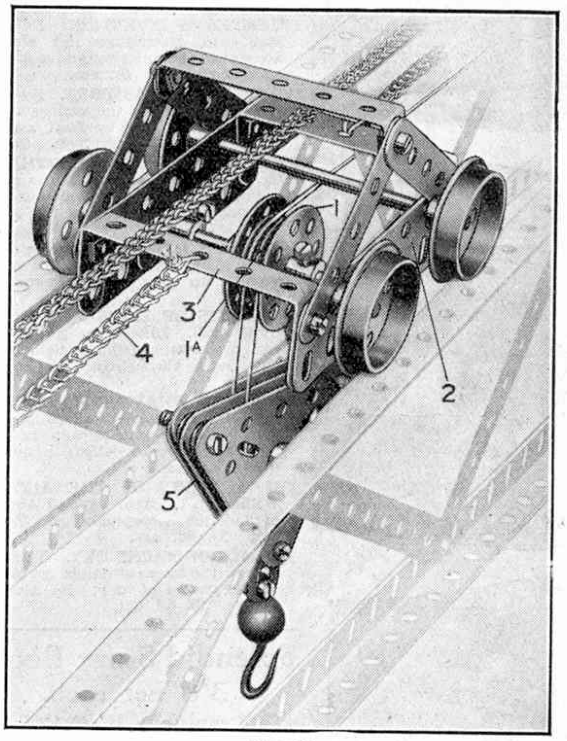

Fig. D

Fig. C clearly shows the construction of the traveller, and reference to the following Standard Mechanisms will solve any constructional difficulties that are not sufficiently clear in this article; S.M. 32 (Two-sheave Pulley Block), S.M. 39 (Guide Pulley), S.M. 69 (Drive-changing Gear), S.M. 101 (Roller Bearings), S.M. 155 (Overhead Trolley), and S.M. 169 (Traversing Gear), etc.

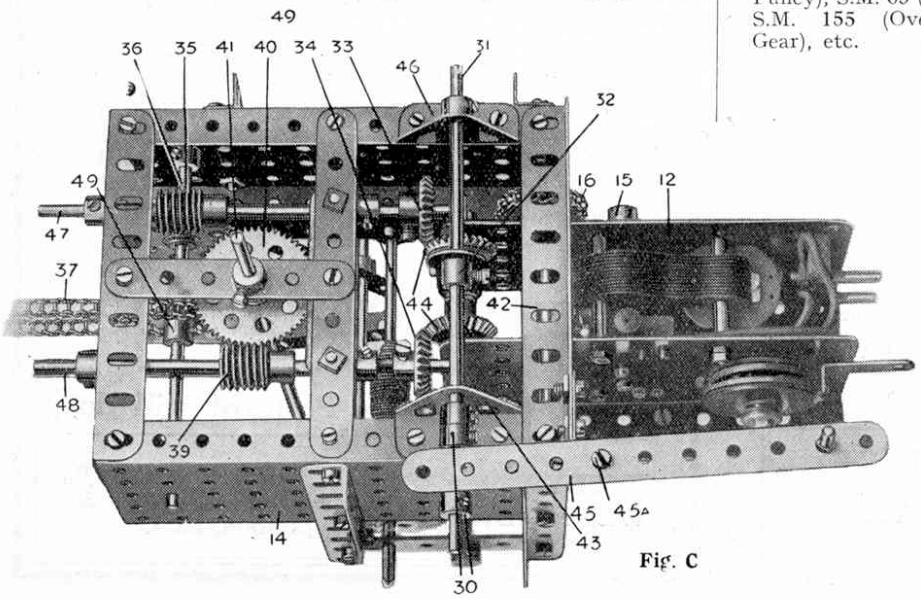

Fig. C

Parts required:

24	of No.	1	2	of No.	14	2	of No.	52
4	„ „	1B	5	„ „	15	8	„ „	52A
3	„ „	2	3	„ „	16	2	„ „	53A
10	„ „	2A	8	„ „	16A	1	„ „	57B
14	„ „	3	3	„ „	16B	32	„ „	59
7	„ „	4	1	„ „	17	1	„ „	62
8	„ „	5	1	„ „	18A	3	„ „	63
5	„ „	6A	12	„ „	20	4	„ „	70
18	„ „	7	1	„ „	22	3	„ „	76
20	„ „	8	5	„ „	22A	2	„ „	94
4	„ „	8B	4	„ „	24	1	„ „	95A
5	„ „	9	4	„ „	26	3	„ „	96A
15	„ „	9A	5	„ „	27A	4	„ „	103
2	„ „	9B	4	„ „	30	12	„ „	103B
7	„ „	9D	2	„ „	32	1	„ „	103C
2	„ „	9F	447	„ „	37	2	„ „	103D
1	„ „	10	5	„ „	37A	1	„ „	103H
1	„ „	11	44	„ „	38	2	„ „	109
4	„ „	12	1	„ „	40	3	„ „	111
2	„ „	12A	1	„ „	45	8	„ „	119
16	„ „	12B	2	„ „	46	8	„ „	125
1	„ „	13	8	„ „	48	2	„ „	126
1	„ „	13A	1	„ „	48A	1	„ „	126A