Among the Model-Builders

By "Spanner"

Dog Clutch Used as a Coupling

The most common use of the Dog Clutch (Part No. 144) is to allow a drive to be engaged or disengaged by sliding a shaft bearing one half of the Clutch. In the present arrangement, however, the two parts of the Clutch are constantly engaged.

When a long shaft, such as the 11½" Axle Rod, has to carry several pinions and gear wheels, it is advisable to support it in the middle as well as at the ends, so as to keep all the gears meshing smoothly. It is fairly easy to align the three supports so that the Rod rotates quite freely. In certain kinds of models, however, much longer shafts are required, made up of two or more 11½" Rods joined by Couplings, and in these cases it becomes quite a problem to align all the supporting bearings perfectly. In these circumstances, the use of a Dog Clutch instead of a Coupling for joining the Rods together will be found more satisfactory in ensuring that the shaft runs quite freely. The manner of using the Dog Clutch for this purpose is suggested by Mr. A. B. Partridge, Moulton, Northampton, and is shown in the drawings reproduced in Fig. 1. One of the Rods to be coupled lies short in the male member of the Clutch A (Sketch A), while the other Rod lies long in the female member B. If used the other way about the join will be looser. One of the Rods should be supported close up to the coupling, but the other Rod is better not supported except at its outer end. The complete arrangement for a compound rod carrying several gears and pinions is shown in Sketch B.

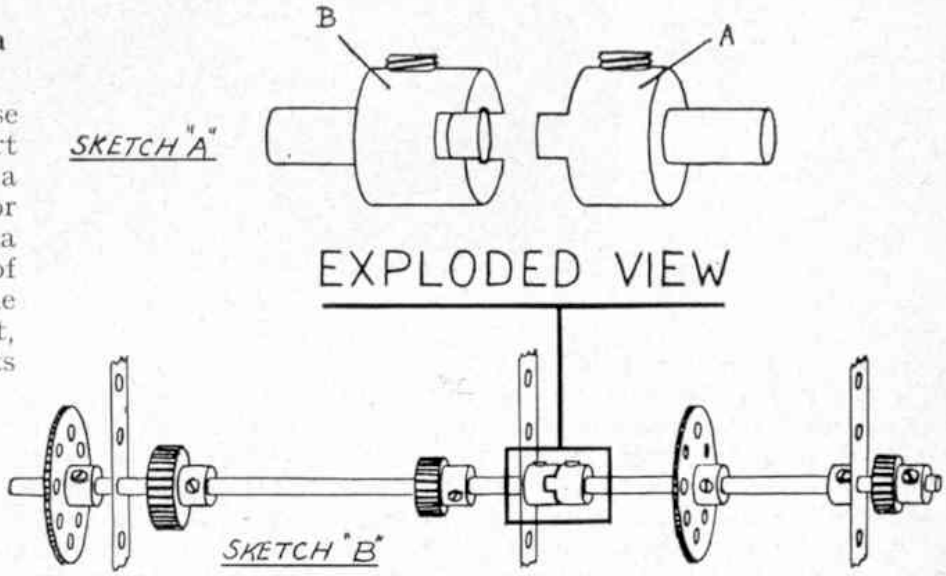

Fig. 1. These sketches show how a Dog Clutch can be used for coupling long rods to ensure free running. The method is suggested by A. B. Partridge, Moulton, Northampton.

The Dog Clutch transmits the drive from one Rod to the other and

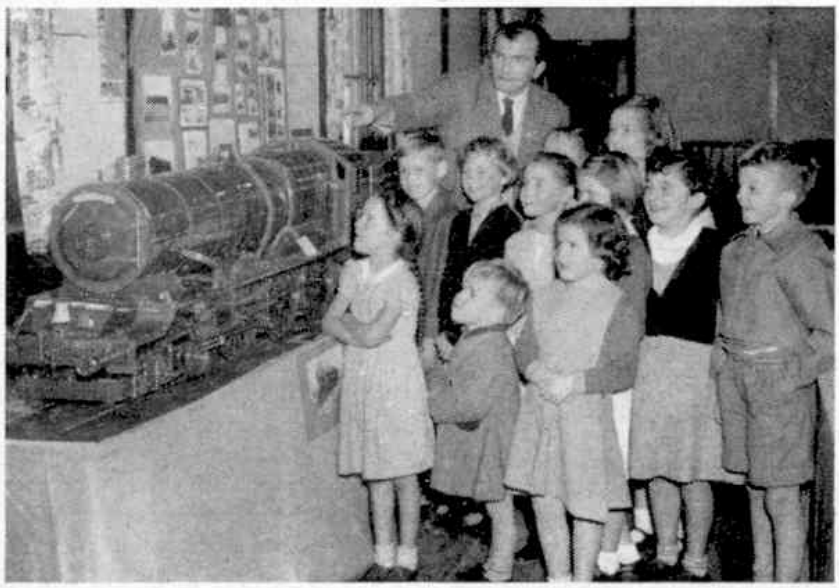

A finely finished 10 ft. model of the "King George V" 4-6-0 locomotive, on show at the British Railways Arts and Crafts Exhibition, Newton Abbot, last Autumn. It was built by B. W. Rowe, who is seen in the picture. Photograph by courtesy of the Torquay Times and Devonshire Press Ltd., Torquay.