(279)—A Compact Three-Speed Gear-Box

(J. Ridgway, Stockton-on-Tees)

The three-speed and reverse gear-box illustrated in Fig. 279 is of particular interest on account of its extreme compactness. It is in fact probably the smallest gear-box that can be built with Meccano to give three forward speeds and reverse.

The frame is made by securing two 3″ Angle Girders to a Flat Girder and placing two 1″ × 1″ Angle Brackets at each end of the channel girder so formed. The Brackets are each spaced from the Angle Girders by means of a Flat Bracket placed underneath. This is necessary for the Pinions 3 and 8 to mesh correctly. The driving shaft 1 carries a 1″ Pulley forming one of the clutch members, and also a ¾″ Pinion 3 and a ½″ Pinion.

The end of the Rod is inserted in the bore of the ½″ Pinion 4 that is carried on a separate Rod 2 from which the final drive is taken. The latter Rod carries also a ¾″ Pinion and Collar. The sliding layshaft is a 4½″ Rod on which are a ½″ Pinion 5, a ¾″ Pinion 6 and a ½″ Pinion 7. A ½″ Pinion 8 is carried on a ¾″ Bolt screwed into the transverse bore of a Threaded Boss and locked by means of a Grub Screw screwed into the opposite end of the bore. The Threaded Boss is rigidly attached to the gear-box frame by a ½″ Bolt 9, but is spaced by a Collar and two Washers.

The movement of the sliding shaft is controlled by a ⅜″ Bolt 10, the head of which fits between the bosses of the Pinions 6 and 7. The Bolt is fixed in a Collar on the end of a 3″ Rod forming the gear change lever, and pivoted to a 1″ Triangular Plate by a further Collar secured in place on the Rod by its Grub Screw, and carrying also a bolt whose shank passes through one of the holes in the Triangular Plate. The Bolt is locked in position by a nut to allow the Rod to pivot freely.

As shown in Fig. 279, first forward speed is in engagement, the drive passing through the ½″ Pinion on the driving shaft 1 to the ¾″ Pinion 6 on the layshaft. The ½″ Pinion 7 engages the ¾″ Pinion on the driven shaft so that there are two stages of reduction gearing between driving and driven Rods. By sliding the layshaft to the right the Pinion 7 disengages, but Pinion 6 remains in engagement with its ½″ Pinion and at the same time meshes with Pinion 4. This gives a straight through drive. Further movement of the sliding Rod brings into engagement Pinions 3 and 5, and 6 and 4, in this case providing two step-up stages for top gear. Reverse gear is obtained when the rod is slid over to the extreme left, and the drive then goes through Pinions 3 and 8—which are in constant mesh—to Pinion 6, and Pinion 7 engages the ¾″ Pinion.

(280)—Device to Increase Crank Stroke

(F. Warner, Capetown, S.A.)

This ingenious mechanism gives a stroke almost double the length of the actual crank stroke. It is employed in certain air compressors, one of the advantages of the arrangement being the saving of space made possible by the use of a smaller crankcase than would be necessary with the full size of crank.

A suitable frame is built up from two 2½″ × 2½″ Flat Plates spaced apart by 2½″ × ½″ Double Angle Strips. Two 5½″ Angle Girders are placed vertically at one side of the Flat Plates and at the other side is a pair of 7½″ Strips. In fitting these, care should be taken to see that they are quite straight, as even a slight bend will impair smooth running. They should also be placed parallel for the same reason.

The crankshaft is built up from two 1½″ Rods, and on the inner end of each is a Coupling placed transversely and carrying a 1″ Rod. These two Rods are provided with Collars that are connected by a 1″ Screwed Rod 1. It is necessary to fit the Collars on the Screwed Rod before placing them in position. The crankshaft assembly will be quite clear on reference to Fig. 280.

The 2½″ Strip 2 is pivoted at its centre hole on the Rod 1, and is held in place by lock-nuts on each side. One end of the Strip is pivoted to a 3½″ Strip 4, the upper extremity of which is held loosely on the Screwed Rod connecting the vertical 5½″ Angle Girders. For the connecting rod a 3½″ Strip 3 is used, and a 2½″ Rod 5 is passed through its end hole. The Strip is placed in the fork of an End Bearing and is centred on the Rod by two Collars. Eye Pieces are fixed one at each end of the Rod and these slide up and down on the 7½″ Strips. The Strips are spaced apart at the top by two 1″ Rods held in Cranks and a Coupling 6. The latter forms a guide for the reciprocating Rod that is held in the End Bearing at the end of the connecting rod 3.

The Strip 2 forms a lever of the third order, the fulcrum of which is located at the lower extremity of the Strip 4. As the crankshaft is rotated its movement is imparted to the Strip 2, and since the pivot for the connecting rod is double the distance of the Rod 1 from the fulcrum, it travels twice the distance, and thus doubles the crank stroke. This extra movement, however, is obtained at the sacrifice of power, but the connecting rod moves at twice the speed of the crank.

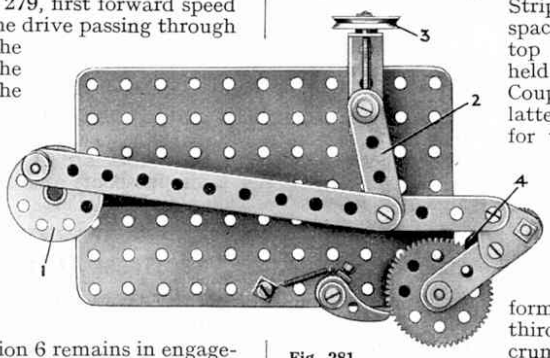

Fig. 281.

(281)—Variable Ratchet Feed

(S. Croston, Belfast)

The necessity sometimes arises to adjust the feed of a ratchet without stopping the driving mechanism, and an ingenious arrangement for carrying this out is shown in Fig. 281. The Bush Wheel 1 forms the driving crank that imparts reciprocating motion to the 5½″ Strip forming the connecting rod. The end of this Strip is connected to two pivoted links, one of which is attached by a bolt and lock-nuts to a 1″ Triangular Plate at the end of the 2″ Strip swinging about the Rod that carries the 57-teeth Gear. The Strip is spaced from the Gear by two Washers, and at its other end is a Pivot Bolt carrying a Pawl 4 that is held in constant engagement with the Gear Wheel by a length of Spring Cord. A second Pawl prevents backward movement of the Gear.

The 2″ Strip 2 is pivoted on a Bolt that is screwed into the end hole of a Threaded Boss and locked by a nut. The Threaded Boss is carried on a 2″ Screwed Rod, the upper end of which is fitted with a handwheel 3. By operating this wheel the position of the link 2 can be varied, and when the Threaded Boss is at the lower end of its Screwed Rod the maximum movement is imparted to the swinging Strip carrying a Pawl 4, which causes the 57-teeth Gear to move through a corresponding distance. As the link 2 is raised the movement of the connecting rod is partially absorbed by the two 2″ Strips, and the movement of the Pawl is decreased until it reaches its minimum when the Threaded Boss carrying the link 2 reaches the end of its travel.

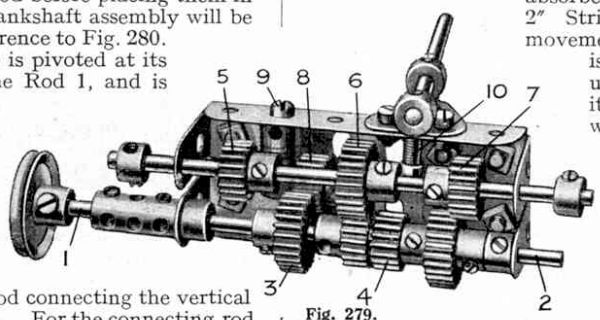

Fig. 279.

If very fine adjustments of feed are required a larger Gear should be substituted for a 57-teeth Gear at present used. The reason for this is obvious, as at present the smallest variation it is possible to obtain is 1/57th of a revolution, that is the movement through one tooth of the Gear. By using a 2½″ or 3½″ Gear adjustments as fine as 1/95th or 1/133rd can be made.

Miscellaneous Suggestions

Under this heading "Spanner" replies to readers who submit interesting suggestions regarding new Meccano models or movements that he is unable to deal with more fully elsewhere. On occasion he offers comments and technical criticisms that, he trusts, will be accepted in the same spirit of mutual help in which they are advanced.

(M.156.) Compact Free-wheel.—G. Green (Purley) suggests the use of the Anchoring Spring for Meccano Cord (Part No. 176) for a free-wheel device. The Spring is mounted on the Rod carrying the Gear that is to "free-wheel," and an Angle Bracket is bolted to the Gear in such a manner that its other hole fits over the loop of the Spring. When rotating one way the Gear tends to unwind the coil of the Spring, and the latter does not grip the Rod; but when rotated the other way the coil firmly grips the Rod and imparts a positive drive. No doubt certain uses will be found for this device, but its application is limited on account of the excessive friction.